SPARE LIST

							**CLIENT: SUN PETROCHEMICALS PVT. LTD.**
						**CONSULTANT:** 	**PROJECT NO.: EJB-2026-02-030**
0	09-10-2026	Issued for Enquiry	PC	RBP	VJS		
REV	**DATE**	**DESCRIPTIONS**	**PRPD BY**	**CHKD BY**	**APPD BY**	**PROJECT: NEW CRUDE OIL PUMP HOUSE AT CPF**	

	TITLE	DOCUMENT NO.	REV.
NAVITERA	**SPARE LIST**	EJB-2026-02-030-MEC-GEN-001	0
		Sheet 1 of 2	

SPARE LIST FOR PUMPS

Commissioning spares

Sr. No.	Item Description	Qty.
1	Pump gaskets & O rings	100%
2	Seal faces	1 set

Insurance spares & 2 years operational spares

Sr. No.	Item Description	Qty.
1	Mechanical Seal (complete)	01 Set
2	Pump gaskets & O rings	100%
3	Pump bearings (DE + NDE)	01 Set
4	Motor bearings (DE + NDE)	01 Set
5	Coupling (complete)	01 Set
6	Motor Fan	01 no.

Note: - "Set" means complete replacement of particular part in one pump

GENERAL SPECIFICATION

FOR

CENTRIFUGAL PUMP (API)

							**CLIENT: SUN PETROCHEMICALS PRIVATE LIMITED**
						**CONSULTANT:** 	**PROJECT NO.: EJB-2026-02-030**
0	09.10.2026	ISSUED FOR ENQUIRY	PC	RBP	VJS		
REV	**DATE**	**DESCRIPTIONS**	**PRPD BY**	**CHKD BY**	**APPD BY**	**PROJECT: NEW CRUDE OIL PUMP HOUSE AT CPF**	

	TITLE	DOCUMENT NO.	REV.
NAVITERA	**GENERAL SPECIFICATION FOR CENTRIFUGAL PUMP(API)**	EJB-2026-02-030-MEC-GEN-002	0
		SHEET 1 OF 16	

TABLE OF CONTENTS

1.0	INTRODUCTION	3
2.0	GENERAL REQUIREMENTS:	3
3.0	SCOPE OF SUPPLY:	4
4.0	BASIC DESIGN:	4
5.0	ACCESSORIES:	8
6.0	INSPECTION AND TESTING:	10
7.0	PREPARATION FOR SHIPMENT:	12
8.0	VENDOR'S DATA:	13
9.0	GUARANTEES:	13

APPENDIX-1 (DRAWINGS AND DOCUMENTS SCHEDULE)

NOTES: -

THIS DOCUMENT SHALL BE USED WITH RELEVANT INFORMATION CONTAINED IN THE DOCUMENTS LISTED BELOW (IN ORDER & PRIORITY)

1. LETTER FOR INVITATION OF BIDDER SUCCEEDING OFFICIAL CONFIRMED ORDER.
2. PROCESS DATA SHEET AND MECHANICAL DATA SHEET OF PARTICULAR PUMP WITH RELEVANT DRAWINGS, IF ANY FOR THE PROJECT IN QUESTION.
3. THIS DOCUMENT
4. CODES & STANDARDS REFERRED IN THE ABOVE-MENTIONED DOCUMENTS AND IN THIS DOCUMENT.

1.0 INTRODUCTION

Sun Petrochemicals Private Limited (SunPetro) is developing its Bhasker onshore field at Anand district of Gujarat. Currently, this field has some oil / gas production wells and water disposal wells drilled by past operator and kept capped. Additionally, there is land available for development of Central Processing Facility (CPF) the field.

Sun Petro plans to develop this field for full-fledged field development with provisions of connecting future wells.

2.0 GENERAL REQUIREMENTS:

2.1 This specification shall be followed in establishing the minimum engineering requirements for centrifugal pumps for service within the limits of process plants and pipeline applications.

2.2 The vendor shall comply with the requirements of this specifications & attachments.

2.3 Pump shall be designed to develop the specified differential head at rated capacity, suction pressure and specific gravity while running at rated speed.

2.4 Rated speed of pump shall be full load speed of motor. In case motor is not in vendor's scope, full load speed of driver with other detail shall be provided to the pump vendor. The pump performance shall be guaranteed/ tested with reference to the full load speed of drive motor.

2.5 Pump shall have SI dimensions and comply with applicable ISO std. Except for piping connection which shall be as per ANSI / ASME standard.

2.6 The pump and accessories shall be suitable for outdoor, unsheltered installation and continuous duty unless otherwise specified in respective specification sheet.

2.7 The pump shall be supplied complete with all the accessories as specified in the specification sheet inclusive of necessary appurtenances, auxiliary piping, Special tools, etc.

2.8 Accessories required / recommended by pump vendor other than those specified in pump specification sheet for safe and efficient operation of the pump unit shall be included in pump vendor scope of supply and the same shall be indicated in the offer separately with adequate justification.

2.9 The offered pump model shall be a proven design and shall be from existing regular production range of the manufacturer. At least two units of the offered model designed, manufactured, and supplied earlier from their works shall have been operating at the plant site and out of these at least one unit shall have completed a minimum of 8000 hours of satisfactory operation individually at the specified operating parameters without any major overhaul.

2.10 Elaborate reference list for each pump model shall be furnished along with the offer separately, giving all details such as complete address of user, user's purchase order number, date of

commissioning, number of hours of operation and with similar duty conditions (like liquid handled, viscosity, flow rate, head, suction pressure, discharge pressure, temperature, speed and rated absorbed power).

2.11 Deviations, if any, should be covered under separate heading in vendor's proposal, along with reasons. Deviations mentioned at any other place in the bid/offer shall not be accepted.

3.0 SCOPE OF SUPPLY:

3.1 Scope of supply and accessories required shall be as specified in the enclosed Process Data Sheet cum Mechanical Data Sheet.

4.0 BASIC DESIGN:

4.1 CODES AND STANDARDS:

The equipment supplied by the manufacturer shall conform in all respects to the standards listed below:

a)	Selection, Operation and Maintenance of Pumps	OISD-STD-119
b)	Inspection & Maintenance of Mechanical Seals	OISD-STD-125
c)	Oil Mines Regulations, 2017	OMR-2017
d)	Centrifugal Pump for Petroleum, Petro Chemical and Natural Gas industries	API 610 11th EDITION
e)	Centrifugal Pump test	API 610 11th EDITION
f)	Mechanical Vibration, Balancing Quality Requirement of rigid rotor	ISO 1940-1, latest Edition
g)	Mechanical Seals / Seal flushing / cooling / quenching	API 682, latest Edition

4.2 It shall be possible to dismantle the complete rotor assembly of the pump without removing the piping connected to it. If required, Vendor shall include pump cartridge withdrawal cradle with puller device in special tools and tackles required for pump.

4.3 Pressure gauge connection shall not be provided unless specified, in the data sheet. All casing screwed connections shall have minimum ½ inch NPT threads. All threaded connections shall be to NPT.

4.4 Pumps shall have a continuously rising head curve from duty point to shut off. Minimum head rise between rated head and shut off head shall be as below:

For pumps operating single - 5%

For pumps operating in parallel - 10%

Actual shut off head of the pump shall not exceed 120% of the head at rated capacity or as specified in the data sheet.

4.5 For parallel operation, if specified, pump shall have identical characteristic curves.

4.6 Impeller diameter shall be selected such that minimum 5% Increase in head at rated capacity is possible with the same casing by changing the impeller.

4.7 Pump shall not be offered or supplied with minimum impeller diameter. Selected impeller diameter shall be with a margin of at least 5% from minimum impeller diameter.

4.8 Vendor to specify suction specific speed of the offered pump.

4.9 The pump NPSHR value shall correspond to the maximum value of NPSHR from minimum continuous flow to rated flow. Margin between NPSHR and NPSHA shall be minimum 0.5 m. NPSH value to be demonstrated by pump vendor during shop testing in case difference between NPSHR and NPSHA is less than or equal to 1.5 meter.

Pumps fitted with inducer are not acceptable, unless it is backed up by the feedback from the identical installation for the satisfactory working of the pumps fitted with inducer.

4.10 Maximum impeller size of single stage overhung design, operating at 2950 rpm or above shall be limited to 380mm.

4.11 Impeller shall be keyed to pump shaft and fixed by impeller nut. Threading shall be of opposite hand to the direction of rotation of pump. A suitable arrangement shall be provided to avoid reverse rotation.

4.12 Impeller shall be statically and dynamically balanced.

4.13 Impeller and rotor assembly shall be balanced to ISO 1940-1 grade G 2.5.

4.14 For multi-stage pumps, the impellers shall be arranged in back-to-back form to reduce the thrust. Also, suitable balancing arrangement shall be provided, giving the complete details of the same.

4.15 Vendor shall indicate minimum continuous stable flow (MCSF) for pump. In case it is more than specified minimum flow, vendor shall include difference of flow (MCSF of pump - specified minimum flow) in the pump rated flow and shall supply minimum flow orifice assembly with companion flanges, nuts, bolts and gaskets. Material of construction shall be as follow:

Orifice plate: AISI316

Flanges: Same as pump casing

For design of orifice plate, downstream pressure for by-passed liquid shall be considered same as pump suction pressure.

The same shall be specifically mentioned in datasheet.

4.16 For pumps handling viscous fluids, correction factors on head, efficiency and flow shall be specifically mentioned on the data sheet.

4.17 For vertical pumps head shall be measured at the discharge flange at pump mounting level. Pumps shall be suitable to develop specified discharge head in addition to the column losses and vertical distance between minimum level in sump tank and centre line of discharge flange. Pump vendor shall indicate total head to be developed by the pump in offer.

4.18 Renewable wearing surfaces shall be furnished on impeller & casing. Impeller and casing wear rings shall have minimum 50 BHN hardness difference.

4.19 The shaft shall be sized to transmit the full driver output or the power required for the maximum impeller diameter for end of curve, whichever is higher.

4.20 Pump direction of rotation shall be marked on the casing.

4.21 Mechanical seal shall conform to API 682. Mechanical seal category shall be category 2.

4.22 Mechanical seal shall be Flowserve / Eagle Burgmann / John Crane make.

4.23 Pumps shall be provided with shaft sleeve under mechanical seal. Mechanical seal sleeve shall be hardened.

4.24 The pump seal chamber and seal gland shall have a pressure-temperature rating at least equal to the maximum allowable working pressure and temperature of the pump casing.

4.25 Mechanical seal flushing fluid heat exchangers material of construction shall be as follows:

Shell : Carbon steel.

Tubes : AISI 304

4.26 Vendor shall supply complete seal flushing piping along with all accessories as per the specified API plan including the optional items.

4.27 When specified, vendor shall provide packing in place of mechanical seal. The stuffing box of the pump shall house minimum five rings of packing and a lantern ring. The stuffing box shall have provision for cooling / lubrication through lantern ring. All auxiliaries as required for flushing of gland packing shall be in vendor scope of supply. Graphite / PTFE packing, as compatible with pumping fluid, shall be used. Packing size shall be preferred 3/8” and larger.

All pumps shall be provided with a set of gland packing in addition to that assembled in pump.

The renewable hardened shaft sleeve shall be provided at packing area.

4.28 Bearings shall be of SKF / FAG make. Bearings shall be oil ring seals on housing suitable for outdoor installation / operation. The L10 life for the bearings shall be minimum 25,000 hours in the specified service with continuous operation at maximum radial and axial loads. The power end shall have magnetic plug. The deflector shall be provided to avoid oil carry over to seal or pumping fluid carryover to bearing housing.

4.29 Bearing housing shall be arranged so that the bearing can be replaced without disturbing pump drives or mountings.

4.30 All fluid passages within the pump shall be arranged for complete drainage, where practicable.

4.31 The material of construction of parts shall be as per the data sheet. However, Vendor may at his option, offer superior material than specified. The material grade shall be as per IS, BS or ASTM or another international equivalent.

4.32 The repair of leaks and defects in pressure castings by the use of plastic or cement compound is prohibited. The Purchaser's / third party inspector's prior approval shall be obtained for the repair of castings, when authorized, repair shall be carried out in accordance with applicable ASTM specification. Welding of fabricated parts shall be entrusted to only qualified welders.

4.33 Oil reservoirs and housing that enclose moving lubricated part, such as bearings, shaft seals, highly polished parts, instrument & control elements, shall be designed to minimize contamination by moisture, dust, and other foreign matter during periods of operation and idleness.

4.34 The combined sound intensity for complete unit shall not exceed 85 dB (A) at horizontal distance of 1 meter from the skid of the unit.

4.35 A name plate of 18cr-8Ni stainless steel or Monel securely attached by stainless steel pins at an easily accessible point on the pump body shall be furnished. The name plate shall be stamped with following information:

a) Purchaser's item number

b) Capacity in m3/hr

c) Differential head in meters

d) Revolution per minutes

e) Casing hydrostatic test pressure in kg / cm2 g

f) Absorbed power in kw/HP

5.0 ACCESSORIES:

5.1 Coupling shall be of flexible type, all metallic with spacer for back-pull out type pump or pin and bush type design. Couplings shall be designed considering minimum service factor as below on driver kW rating:

Type of driver	Service factor
Motor	1.5
Steam turbine	1.25
Diesel engine	3.0

5.2 Coupling shall be individually balanced - both statically as well as dynamically.

5.3 Coupling shall be balanced to ISO 1940-1 Grade G 6.3.

5.4 Coupling guard shall be non-sparking, removable type. Coupling guard shall be sufficiently rigid to withstand 100 kg of dead load without any deflection.

5.5 For pumps handling corrosive liquids, provision shall be made to collect leakage across outer seal by providing suitable corrosion resistant drip tray fitted in the bearing lantern under the stuffing box. Necessary piping to drain off the collected liquid in the drip tray up to edge of base plate, terminating into flanged, connection shall be provided by pump vendor.

5.6 All auxiliary piping shall terminate with flange at the edge of base plate.

5.7 For mechanical seal, Barrier / Buffer fluid reservoir for Plan 52 & 53 along with fluid circulation piping / tubing shall be assembled on the pump base plate.

5.8 Vertical pumps taking suction from sump / vessel shall be provided with corrosion resistant suction strainer, perforation / mash size shall be suitable for proper operation of sump. Free flow area of the strainer shall be minimum 2.5 times the area of equivalent suction nozzle area.

5.9 The need for cooling shall be determined by the vendor. The cooling system shall be suitable for operation with the coolant type, pressure and temperature specified by the purchaser.

5.10 Cooling water or steam piping (if required) shall have manifold. Purchaser will provide only one external connection for service.

5.11 Steam Jacket, if provided, shall have clean-out connections arranged so that the entire passageway can be mechanically cleaned, flushed, and drained.

5.12 Steam Jacket system, if provided, shall be designed to prevent the process stream from leaking into the jacket. Jacket passages shall not open into casing joint.

5.13 A warm-up system with orifice plate and interconnected piping / accessories shall be provided wherever hot start-up of pump is detrimental to pump parts or for pumping liquid temperature above 180 °C, as a minimum.

5.14 Pump shall be mounted on a common base frame extending up to the pump and motor. The base frame shall be heavy-duty type, and the allowable external forces and moments on pump suction & discharge nozzles shall be twice of the requirement specified in API 610 based on grouted base plate.

5.15 Base plate shall be steel fabricated and shall have sufficient rigidity to avoid vibration and distortion. Base plate shall be designed as to facilitate proper grouting (Vent holes where required shall be provided). Base plate shall be cleaned inside and outside and coated with suitable anticorrosive paint.

5.16 Base plate shall be drilled and tapped by pump manufacture for installing the motor even when the driver is arranged by purchaser.

5.17 If horizontal pump and/ or motor weigh more than 450 kg., jack screws shall be provided for vertical and horizontal movement, for pump and motor alignment.

5.18 **ELECTRICAL:**

5.18.1 Drive Motor shall confirm to electrical specification and motor datasheet enclosed.

5.18.2 Driver / electricals for pump shall be suitable for area classification specified in pump datasheet / Motor datasheet.

5.18.3 The driver shall be sized to meet the maximum specified operating conditions, including bearing, mechanical seal, external gear, and coupling losses, as applicable.

5.18.4 Motor shall be selected with rating at least equal to the following percentage of rated absorbed power at pump shaft.

Pump absorbed power (BkW) (*)	Motor rating (KW)
Less than 22	125% of rated pump BKW
22 to 55	115% of rated pump BKW
over 55	110% of rated pump BKW

(*) Pump BKW is calculated with max. Specific gravity, if specified in datasheet.

Also, wherever pumping fluid specific gravity is less than 1.0, the suitability of motor rating for pump running at minimum continuous stable flow with commissioning fluid having specific gravity of 1.0, shall be checked.

5.18.5 For transfer and unloading service with auto-start facility, the motor shall be suitable for starting against full open discharge valve (end of curve power) or the specified margin as per this clause whichever is maximum.

6.0 INSPECTION AND TESTING:

6.1 All items shall be inspected by Purchaser / appointed 3rd party as per approved Quality plan. All items shall be subjected to stage wise inspection. Vendor shall provide Quality Assurance (QA) plan for Purchaser approval before commencement of fabrication.

6.2 Purchaser's representative/ TPI shall be given free access to shops for stage-wise inspection.

6.3 All instruments used for testing shall be calibrated to National / International standards by approved agency. Calibration certificates shall be produced at the time of inspection.

6.4 Vendor shall perform all test & inspection necessary to ensure that the material and workmanship confirm to the purchaser's requirements.

6.5 Inspection and testing shall be carried out as per the requirements given below:

Sr. No	Components	Inspection requirement
1	Casing / diffuser	Chemical analysis Tensile test Impact test* LPT / MPT Radiography
2	Impeller	Chemical analysis Tensile test Impact test* LPT / MPT Dynamic balancing
3	Shaft	Chemical analysis Tensile test Impact test* Ultrasonic test
4	Wear rings / Shaft sleeves / spacer sleeves	Chemical analysis Hardness test
5	Assembled set	Vibration check during shop test

		Visual Inspection (Dimensions and direction of rotation viewed from coupling end)

*Impact test shall be applicable wherever design temperature is less than (-) 30 °C.

6.6 Inspector shall inspect / witness the following:

a) Review of material test certificates for casing, impeller, shaft, shaft sleeve, wearing rings etc.

b) Dynamic balancing of impeller as per ISO 1940-1

c) Hydrostatic test

d) NPSHR test, when specified.

e) Impact test, if required

f) Performance test including vibration check.

g) Pump disassembly test (when specified)

h) Visual inspection and dimensional check

6.7 Vendor shall advise the purchaser well in advance when the component / item / equipment is ready for inspection in the vendor's shop and / or his sub-vendor's shop. In case the system failing the performance test, the vendor shall make necessary modification at his works and carryout repeat test at his own expense.

6.8 Acceptance of shop test shall not constitute a waiver of requirements to meet the field checks under operating condition nor does inspection relieve the manufacturer of this responsibility in any way whatsoever.

6.9 **Hydrostatic test:**

All pressure retaining parts of pump shall be hydro tested with no visible leakage for 30 minutes duration. Hydrotest pressure shall be 1½ times the maximum allowable working pressure as specified in datasheet at ambient temperature. Jackets for bearings, stuffing box, coolers, etc. shall be tested at 8 kg/cm2g or 1.5 times the maximum allowable jacket working pressure as specified in the data sheet, whichever is higher.

Hydrostatic test liquid shall have chloride content less than 50 ppm.

6.10 **Performance testing:**

6.10.1 Unless otherwise specified, the performance test shall be conducted as specified in a) through. e) as follows (The vendor shall take test data, including head, flow rate, power and vibration).

a) Shutoff (no Vibration data required).

b) Minimum Continuous Stable Flow (Beginning of allowable region).

c) Between 95% and 99% of rated flow.

d) Between rated and 105 % of rated flow.

e) Best Efficiency Flow.

f) End of allowable operating region.

Shop performance test is to be carried out with water.

Pump shall be performance tested in shop with shop motor, shop coupling and shop mechanical seal fitted. However, for all pumps final performance test is to be carried out along with job motor job coupling and job mechanical seal at site with the process fluid.

6.10.2 During the performance test, pump shall operate without undue heating of bearing, excess vibration, noise, and other mechanical faults. Such defects if noticed shall be promptly rectified to the satisfaction of the inspector.

6.10.3 When operating fluid has viscosity appreciably higher than test fluid, test values of capacity, head, efficiency, and power input shall be corrected to specified viscosity of operating fluid.

6.11 **NPSH test:**

NPSH test shall be carried out at five points specified in performance test above except at pump shut off point.

During NPSH test on set of cavitation shall be indicated by 3% drop in differential head. For multistage pumps, the 3% drop in pressure shall be tested at first stage discharge with separate connection or with individual impeller.

6.12 **Disassembly test**

After performance test, pump shall be opened and checked for internals having any undue wear.

7.0 PREPARATION FOR SHIPMENT:

7.1 Pump shall be dispatched only after the shop test data and performance test curves are approved by the inspector.

7.2 The unmachined exterior surfaces shall be sand blasted, descaled and cleaned. The surface must be free from foreign material before paint is applied.

7.3 The external surface subjected to atmospheric corrosion shall be painted with two coats of primer and two coats of finished paint.

7.4 All the internal parts and machined unpainted exterior surfaces shall be protected with suitable rust preventive.

8.0 VENDOR'S DATA:

8.1 The pump vendor shall supply the Drawings & Documents as per APPENDIX – 1. Details to be included in each of the documents shall be as per relevant Annexure of API 610.

Each Drawing & Document shall bear the following information in separate block.

- Owner name
- Name of the project / unit
- Consultant name
- Consultant order number
- Equipment code number / name
- Drawing number and revision number
- Supplier reference / number

8.2 The various inspection reports and tests carried out shall be properly recorded, plotted and shall be extrapolated for speed, specific gravity, viscosity etc. Such documents duly signed by vendor's inspector and / purchaser's inspector, shall be submitted to purchaser with requisite number of sets for their record.

8.3 Manufacturer's test certificates shall be furnished for all bought out items. Vendor shall furnish all test certificates related to performance requirements.

8.4 Material test certificates (chemical and mechanical properties) shall be supplied for casing, rotor, shaft, shaft sleeve casing wear rings and impeller wear rings.

9.0 GUARANTEES:

9.1 Mechanical:

Vendor shall stand guarantee against defective materials, poor workmanship and poor design for the period specified in commercial terms and conditions.

9.2 Performance:

The equipment shall be guaranteed for satisfactory performance at all operating conditions specified in the data sheet and performance curve. Field checks on performance, when made by the purchaser, shall be made within the agreed time of initial operation.

9.3 Vendor shall specifically guarantee at rated flow the following.

a) Differential head at rated point with no negative tolerance.

b) NPSHR at rated point with zero tolerance.

c) Rated Power consumption with max +4% tolerances.

d) Vibration and noise level.

Above tolerance are exclusive of instrument tolerances.

9.4 Unless mentioned otherwise in the commercial conditions, performance guarantee and warranty shall be valid for 12 months from the date of commissioning or 18 months from the date of supply, whichever is earlier.

APPENDIX – 1

DRAWINGS & DOCUMENTS SCHEDULE

Along with Offer	After Order / LOI	Description
		Pumps:
X	**X**	1) Pump GA drawing with foundation details
X	**X**	2) Cross sectional drawing with bill of material
X	**X**	3) Performance curves
X	**X**	4) Pump specification sheet with complete details in the proforma enclosed with RFQ
X	**X**	5) Shaft seal drawing with bill of material
X	**X**	6) Shaft coupling drawing with bill of material including allowable misalignment, clearances, shaft bores and keyways dimensions with tolerances
	X	7) Cooling & heating schematic and bill of material including cooling & heating media, fluid flows, pressure, pipe & valve sizes, instrumentation, orifice sizes and piping arrangement drawings
	X	8) Electrical & instrumentation schematics, wiring diagrams and bill of material
	X	9) Electrical & instrumentation arrangement drawing and list of components
X		10) Reference list of pumps supplied in past for similar duty conditions. Reference list shall contain complete address of user, user's purchase order number, specifications and date of commissioning
X	**X**	11) ARC valve assembly drawing, sectional drawing with bill of material
	X	12) QAP (Quality Assurance Plan)
	X	13) Material test certificates
	X	14) Test and Inspection reports
	X	15) Instruction manuals describing installation, operation, and maintenance procedures
X		16) Spare parts recommendation and price list
		DRIVER: As per driver specification enclosed with Tender.

		INSTRUMENTATION:	
		As per instrumentation specification enclosed with Tender	
		Note: X- Applicable	

GENERAL SPECIFICATION

FOR

GEAR PUMP (API)

						sun Petrochemicals	**CLIENT: SUN PETROCHEMICALS PRIVATE LIMITED**
						CONSULTANT: NAVITERA	**PROJECT NO.: EJB-2026-02-030**
0	09.10.2026	ISSUED FOR ENQUIRY	PC	RBP	VJS		
REV	**DATE**	**DESCRIPTIONS**	**PRPD BY**	**CHKD BY**	**APPD BY**	**PROJECT: NEW CRUDE OIL PUMP HOUSE AT CPF**	

	TITLE	DOCUMENT NO.	REV.
NAVITERA	**GENERAL SPECIFICATION FOR GEAR PUMP(API)**	EJB-2026-02-030-MEC-GEN-003	0
		SHEET 1 OF 16	

TABLE OF CONTENTS

1.0	INTRODUCTION	3
2.0	GENERAL REQUIREMENTS:	3
3.0	SCOPE OF SUPPLY:	4
4.0	BASIC DESIGN:	4
5.0	ACCESSORIES:	8
6.0	INSPECTION AND TESTING:	10
7.0	PREPARATION FOR SHIPMENT:	12
8.0	VENDOR'S DATA:	13
9.0	GUARANTEES:	13

APPENDIX-1 (DRAWINGS AND DOCUMENTS SCHEDULE)

NOTES: -

THIS DOCUMENT SHALL BE USED WITH RELEVANT INFORMATION CONTAINED IN THE DOCUMENTS LISTED BELOW (IN ORDER & PRIORITY)

1. LETTER FOR INVITATION OF BIDDER SUCCEEDING OFFICIAL CONFIRMED ORDER.
2. PROCESS DATA SHEET AND MECHANICAL DATA SHEET OF PARTICULAR PUMP WITH RELEVANT DRAWINGS, IF ANY FOR THE PROJECT IN QUESTION.
3. THIS DOCUMENT
4. CODES & STANDARDS REFERRED IN THE ABOVE-MENTIONED DOCUMENTS AND IN THIS DOCUMENT.

1.0 INTRODUCTION

Sun Petrochemicals Private Limited (SunPetro) is developing its Bhasker onshore field at Anand district of Gujarat. Currently, this field has some oil / gas production wells and water disposal wells drilled by past operator and kept capped. Additionally, there is land available for development of Central Processing Facility (CPF) the field.

Sun Petro plans to develop this field for full-fledged field development with provisions of connecting future wells.

2.0 GENERAL REQUIREMENTS:

2.1 This specification shall be followed in establishing the minimum engineering requirements for gear pumps for service within the limits of process plants and pipeline applications.

2.2 The vendor shall comply with the requirements of this specifications & attachments.

2.3 Pump shall be designed to develop the specified differential head at rated capacity, suction pressure and specific gravity while running at rated speed.

2.4 Rated speed of pump shall be full load speed of motor. In case motor is not in vendor's scope, full load speed of driver with other detail shall be provided to the pump vendor. The pump performance shall be guaranteed/ tested with reference to the full load speed of drive motor.

2.5 Pump shall have SI dimensions and comply with applicable ISO std. Except for piping connection which shall be as per ANSI / ASME standard.

2.6 The pump and accessories shall be suitable for outdoor, unsheltered installation and continuous duty unless otherwise specified in respective specification sheet.

2.7 The pump shall be supplied complete with all the accessories as specified in the specification sheet inclusive of necessary appurtenances, auxiliary piping, Special tools, etc.

2.8 Accessories required / recommended by pump vendor other than those specified in pump specification sheet for safe and efficient operation of the pump unit shall be included in pump vendor scope of supply and the same shall be indicated in the offer separately with adequate justification.

2.9 The offered pump model shall be a proven design and shall be from existing regular production range of the manufacturer. At least two units of the offered model designed, manufactured, and supplied earlier from their works shall have been operating at the plant site and out of these at least one unit shall have completed a minimum of 8000 hours of satisfactory operation individually at the specified operating parameters without any major overhaul.

2.10 Elaborate reference list for each pump model shall be furnished along with the offer separately, giving all details such as complete address of user, user's purchase order number, date of

commissioning, number of hours of operation and with similar duty conditions (like liquid handled, viscosity, flow rate, head, suction pressure, discharge pressure, temperature, speed and rated absorbed power).

2.11 Deviations, if any, should be covered under separate heading in vendor's proposal, along with reasons. Deviations mentioned at any other place in the bid/offer shall not be accepted.

3.0 SCOPE OF SUPPLY:

3.1 Scope of supply and accessories required shall be as specified in the enclosed Process Data Sheet cum Mechanical Data Sheet.

4.0 BASIC DESIGN:

4.1 CODES AND STANDARDS:

The equipment supplied by the manufacturer shall conform in all respects to the standards listed below:

a)	API 676	Rotary positive-displacement process pump
b)	API 682	Mechanical seals and sealing systems, where specified
c)	IEC 60034	Electric motor requirements
d)	IEC 60079	Electrical equipment for hazardous areas, where applicable
e)	ASME B16.5	Flanges and flanged fittings, where applicable
f)	ASME B31.3	Process piping, where applicable
g)	ISO 3744 / project requirement	Noise measurement, where specified

4.2 It shall be possible to dismantle the complete rotor assembly of the pump without removing the piping connected to it. If required, Vendor shall include pump cartridge withdrawal cradle with puller device in special tools and tackles required for pump.

4.3 Pressure gauge connection shall not be provided unless specified, in the data sheet. All casing screwed connections shall have minimum ½ inch NPT threads. All threaded connections shall be to NPT.

4.4 Pumps shall have a continuously rising head curve from duty point to shut off. Minimum head rise between rated head and shut off head shall be as below:

For pumps operating single - 5%

For pumps operating in parallel - 10%

Actual shut off head of the pump shall not exceed 120% of the head at rated capacity or as specified in the data sheet.

4.5 For parallel operation, if specified, pump shall have identical characteristic curves.

4.6 The pump shall be a rotary positive-displacement gear pump suitable for continuous industrial operation.

4.7 The pump shall be designed to minimize internal leakage, wear and excessive vibration

4.8 Vendor to specify suction specific speed of the offered pump.

4.9 The pump NPSHR value shall correspond to the maximum value of NPSHR from minimum continuous flow to rated flow. Margin between NPSHR and NPSHA shall be minimum 0.5 m. NPSH value to be demonstrated by pump vendor during shop testing in case difference between NPSHR and NPSHA is less than or equal to 1.5 meter.

Pumps fitted with inducer are not acceptable, unless it is backed up by the feedback from the identical installation for the satisfactory working of the pumps fitted with inducer.

4.10 The vendor shall state the allowable operating range, and maximum differential pressure

4.11 Vendor shall indicate minimum continuous stable flow (MCSF) for pump.

4.12 For pumps handling viscous fluids, correction factors on head, efficiency and flow shall be specifically mentioned on the data sheet.

4.13 For vertical pumps head shall be measured at the discharge flange at pump mounting level. Pumps shall be suitable to develop specified discharge head in addition to the column losses and vertical distance between minimum level in sump tank and centre line of discharge flange. Pump vendor shall indicate total head to be developed by the pump in offer.

4.14 Pump direction of rotation shall be marked on the casing.

4.15 Mechanical seal shall conform to API 682. Mechanical seal category shall be category 2.

4.16 Mechanical seal shall be Flowserve / Eagle Burgmann / John Crane make.

4.17 Pumps shall be provided with shaft sleeve under mechanical seal. Mechanical seal sleeve shall be hardened.

4.18 The pump seal chamber and seal gland shall have a pressure-temperature rating at least equal to the maximum allowable working pressure and temperature of the pump casing.

4.19 The vendor shall specify seal type, arrangement, materials, flushing requirements and expected service.

4.20 Vendor shall supply complete seal flushing piping along with all accessories as per the specified API plan including the optional items.

4.21 When specified, vendor shall provide packing in place of mechanical seal. The stuffing box of the pump shall house minimum five rings of packing and a lantern ring. The stuffing box shall have provision for cooling / lubrication through lantern ring. All auxiliaries as required for flushing of gland packing shall be in vendor scope of supply. Graphite / PTFE packing, as compatible with pumping fluid, shall be used. Packing size shall be preferred 3/8" and larger.
All pumps shall be provided with a set of gland packing in addition to that assembled in pump.

The renewable hardened shaft sleeve shall be provided at packing area.

4.22 Bearings shall be of SKF / FAG make. Bearings shall be oil ring seals on housing suitable for outdoor installation / operation. The L10 life for the bearings shall be minimum 25,000 hours in the specified service with continuous operation at maximum radial and axial loads. The power end shall have magnetic plug. The deflector shall be provided to avoid oil carry over to seal or pumping fluid carryover to bearing housing.

4.23 Bearing housing shall be arranged so that the bearing can be replaced without disturbing pump drives or mountings.

4.24 All fluid passages within the pump shall be arranged for complete drainage, where practicable.

4.25 The material of construction of parts shall be as per the data sheet. However, Vendor may at his option, offer superior material than specified. The material grade shall be as per IS, BS or ASTM or another international equivalent.

4.26 The repair of leaks and defects in pressure castings by the use of plastic or cement compound is prohibited. The Purchaser's / third party inspector's prior approval shall be obtained for the repair of castings, when authorized, repair shall be carried out in accordance with applicable ASTM specification. Welding of fabricated parts shall be entrusted to only qualified welders.

4.27 Oil reservoirs and housing that enclose moving lubricated part, such as bearings, shaft seals, highly polished parts, instrument & control elements, shall be designed to minimize contamination by moisture, dust, and other foreign matter during periods of operation and idleness.

4.28 The combined sound intensity for complete unit shall not exceed 85 dB (A) at horizontal distance of 1 meter from the skid of the unit.

4.29 A name plate of 18cr-8Ni stainless steel or Monel securely attached by stainless steel pins at an easily accessible point on the pump body shall be furnished. The name plate shall be stamped with following information:

a) Purchaser's item number

b) Capacity in m3/hr

c) Differential head in meters

d) Revolution per minutes

e) Casing hydrostatic test pressure in kg / cm2 g

f) Absorbed power in kw/HP

5.0 ACCESSORIES:

5.1 Coupling shall be of flexible type, all metallic with spacer for back-pull out type pump or pin and bush type design. Couplings shall be designed considering minimum service factor as below on driver kW rating:

Type of driver	Service factor
Motor	1.5
Steam turbine	1.25
Diesel engine	3.0

5.2 Coupling shall be individually balanced - both statically as well as dynamically.

5.3 Coupling shall be balanced to ISO 1940-1 Grade G 6.3.

5.4 Coupling guard shall be non-sparking, removable type. Coupling guard shall be sufficiently rigid to withstand 100 kg of dead load without any deflection.

5.5 For pumps handling corrosive liquids, provision shall be made to collect leakage across outer seal by providing suitable corrosion resistant drip tray fitted in the bearing lantern under the stuffing box. Necessary piping to drain off the collected liquid in the drip tray up to edge of base plate, terminating into flanged, connection shall be provided by pump vendor.

5.6 All auxiliary piping shall terminate with flange at the edge of base plate.

5.7 For mechanical seal, Barrier / Buffer fluid reservoir for Plan 52 & 53 along with fluid circulation piping / tubing shall be assembled on the pump base plate.

5.8 Vertical pumps taking suction from sump / vessel shall be provided with corrosion resistant suction strainer, perforation / mash size shall be suitable for proper operation of sump. Free flow area of the strainer shall be minimum 2.5 times the area of equivalent suction nozzle area.

5.9 The need for cooling shall be determined by the vendor. The cooling system shall be suitable for operation with the coolant type, pressure and temperature specified by the purchaser.

5.10 Cooling water or steam piping (if required) shall have manifold. Purchaser will provide only one external connection for service.

5.11 Steam Jacket, if provided, shall have clean-out connections arranged so that the entire passageway can be mechanically cleaned, flushed, and drained.

5.12 Steam Jacket system, if provided, shall be designed to prevent the process stream from leaking into the jacket. Jacket passages shall not open into casing joint.

5.13 A warm-up system with orifice plate and interconnected piping / accessories shall be provided wherever hot start-up of pump is detrimental to pump parts or for pumping liquid temperature above 180 °C, as a minimum.

5.14 Pump shall be mounted on a common base frame extending up to the pump and motor. The base frame shall be heavy-duty type, and the allowable external forces and moments on pump suction & discharge nozzles shall be twice of the requirement specified in API 610 based on grouted base plate.

5.15 Base plate shall be steel fabricated and shall have sufficient rigidity to avoid vibration and distortion. Base plate shall be designed as to facilitate proper grouting (Vent holes where required shall be provided). Base plate shall be cleaned inside and outside and coated with suitable anticorrosive paint.

5.16 Base plate shall be drilled and tapped by pump manufacture for installing the motor even when the driver is arranged by purchaser.

5.17 If horizontal pump and/ or motor weigh more than 450 kg., jack screws shall be provided for vertical and horizontal movement, for pump and motor alignment.

5.18 **ELECTRICAL:**

5.18.1 Drive Motor shall confirm to electrical specification and motor datasheet enclosed.

5.18.2 Driver / electricals for pump shall be suitable for area classification specified in pump datasheet / Motor datasheet.

5.18.3 The driver shall be sized to meet the maximum specified operating conditions, including bearing, mechanical seal, external gear, and coupling losses, as applicable.

5.18.4 Motor shall be selected with rating at least equal to the following percentage of rated absorbed power at pump shaft.

Pump absorbed power (BkW) (*)	Motor rating (KW)
Less than 22	125% of rated pump BKW
22 to 55	115% of rated pump BKW
over 55	110% of rated pump BKW

(*) Pump BKW is calculated with max. Specific gravity, if specified in datasheet.

Also, wherever pumping fluid specific gravity is less than 1.0, the suitability of motor rating for pump running at minimum continuous stable flow with commissioning fluid having specific gravity of 1.0, shall be checked.

5.18.5 For transfer and unloading service with auto-start facility, the motor shall be suitable for starting against full open discharge valve (end of curve power) or the specified margin as per this clause whichever is maximum.

6.0 INSPECTION AND TESTING:

6.1 All items shall be inspected by Purchaser / appointed 3rd party as per approved Quality plan. All items shall be subjected to stage wise inspection. Vendor shall provide Quality Assurance (QA) plan for Purchaser approval before commencement of fabrication.

6.2 Purchaser's representative/ TPI shall be given free access to shops for stage-wise inspection.

6.3 All instruments used for testing shall be calibrated to National / International standards by approved agency. Calibration certificates shall be produced at the time of inspection.

6.4 Vendor shall perform all test & inspection necessary to ensure that the material and workmanship confirm to the purchaser's requirements.

6.5 Inspection and testing of the rotary gear pump shall be carried out in accordance with API 676, the approved Inspection and Test Plan (ITP), applicable codes and standards, and project specifications. The following inspections and tests shall be performed, as applicable:

6.6 **Material Inspection**: Material certificates, chemical composition, mechanical properties, and material traceability shall be verified for pressure-containing parts and other specified components.

6.7 **Visual and Dimensional Inspection**: The pump, driver, baseplate, coupling and accessories shall be inspected for workmanship, dimensions, surface finish, identification, and compliance with approved drawings.

6.8 **Pressure Test**: The pump casing shall be hydrostatically tested in accordance with API 676 and the approved test procedure. Test pressure, duration and acceptance criteria shall comply with the applicable standard.

6.9 **Performance Test**: Pump performance shall be verified, as required by API 676 and the purchase specification, to confirm the specified capacity, differential pressure, speed and power requirements. Test-fluid viscosity and temperature shall be recorded where relevant.

6.10 **Mechanical Running Test**: The pump shall undergo a mechanical running test to verify smooth operation, bearing condition, vibration, temperature and absence of abnormal noise or leakage.

6.11 **Relief Valve Testing**: The integral or separately supplied pressure-relief valve, where applicable, shall be tested and set to the specified pressure. The set pressure shall be compatible with the system design pressure and applicable safety requirements.

6.12 **Mechanical Seal Inspection**: The mechanical seal shall be inspected and tested in accordance with the manufacturer's procedure and applicable project requirements. Leakage shall be within the specified acceptance limits.

6.13 **Electric Motor Testing**: The motor shall be tested in accordance with applicable IEC standards and the approved motor specification. Routine test certificates shall be submitted.

6.14 **Coupling and Alignment Inspection**: Coupling installation, alignment and associated clearances shall be verified before dispatch or site commissioning, as applicable.

6.15 **Final Inspection**: The complete pump package shall be inspected for completeness, nameplate details, painting, preservation, packing and conformity with the approved drawings and purchase order.

*Impact test shall be applicable wherever design temperature is less than (-) 30 °C.

6.16 Inspector shall inspect / witness the following:

a) Review of material test certificates

b) Hydrostatic test

c) NPSHR test, when specified.

d) Impact test, if required

e) Performance test including vibration check.

f) Pump disassembly test (when specified)

g) Visual inspection and dimensional check

6.17 Vendor shall advise the purchaser well in advance when the component / item / equipment is ready for inspection in the vendor's shop and / or his sub-vendor's shop. In case the system failing the performance test, the vendor shall make necessary modification at his works and carryout repeat test at his own expense.

6.18 Acceptance of shop test shall not constitute a waiver of requirements to meet the field checks under operating condition nor does inspection relieve the manufacturer of this responsibility in any way whatsoever.

6.19 **Hydrostatic test:**

All pressure retaining parts of pump shall be hydro tested with no visible leakage for 30 minutes duration. Hydrotest pressure shall be 1½ times the maximum allowable working pressure as specified in datasheet at ambient temperature. Jackets for bearings, stuffing box, coolers, etc. shall be tested at 8 kg/cm2g or 1.5 times the maximum allowable jacket working pressure as specified in the data sheet, whichever is higher.

Hydrostatic test liquid shall have chloride content less than 50 ppm.

6.20 **Performance testing:**

6.20.1 Unless otherwise specified, the performance test shall be conducted as specified in a) through. e) as follows (The vendor shall take test data, including head, flow rate, power and vibration).

a) Shutoff (no Vibration data required).

b) Minimum Continuous Stable Flow (Beginning of allowable region).

c) Between 95% and 99% of rated flow.

d) Between rated and 105 % of rated flow.

e) Best Efficiency Flow.

f) End of allowable operating region.

Shop performance test is to be carried out with water.

Pump shall be performance tested in shop with shop motor, shop coupling and shop mechanical seal fitted. However, for all pumps final performance test is to be carried out along with job motor job coupling and job mechanical seal at site with the process fluid.

6.19.2 During the performance test, pump shall operate without undue heating of bearing, excess vibration, noise, and other mechanical faults. Such defects if noticed shall be promptly rectified to the satisfaction of the inspector.

6.19.3 When operating fluid has viscosity appreciably higher than test fluid, test values of capacity, head, efficiency, and power input shall be corrected to specified viscosity of operating fluid.

6.21 **NPSH test:**

NPSH test shall be carried out at five points specified in performance test above except at pump shut off point.

During NPSH test on set of cavitation shall be indicated by 3% drop in differential head. For multistage pumps, the 3% drop in pressure shall be tested at first stage discharge with separate connection or with individual impeller.

6.22 **Disassembly test**

After performance test, pump shall be opened and checked for internals having any undue wear.

7.0 PREPARATION FOR SHIPMENT:

7.1 Pump shall be dispatched only after the shop test data and performance test curves are approved by the inspector.

7.2 The unmachined exterior surfaces shall be sand blasted, descaled and cleaned. The surface must be free from foreign material before paint is applied.

7.3 The external surface subjected to atmospheric corrosion shall be painted with two coats of primer and two coats of finished paint.

7.4 All the internal parts and machined unpainted exterior surfaces shall be protected with suitable rust preventive.

8.0 VENDOR'S DATA:

8.1 The pump vendor shall supply the Drawings & Documents as per APPENDIX – 1. Details to be included in each of the documents shall be as per relevant Annexure of API 610.

Each Drawing & Document shall bear the following information in separate block.

- Owner name
- Name of the project / unit
- Consultant name
- Consultant order number
- Equipment code number / name
- Drawing number and revision number
- Supplier reference / number

8.2 The various inspection reports and tests carried out shall be properly recorded, plotted and shall be extrapolated for speed, specific gravity, viscosity etc. Such documents duly signed by vendor's inspector and / purchaser's inspector, shall be submitted to purchaser with requisite number of sets for their record.

8.3 Manufacturer's test certificates shall be furnished for all bought out items. Vendor shall furnish all test certificates related to performance requirements.

8.4 Material test certificates (chemical and mechanical properties) shall be supplied for casing, rotor, shaft, shaft sleeve casing wear rings and impeller wear rings.

9.0 GUARANTEES:

9.1 Mechanical:

Vendor shall stand guarantee against defective materials, poor workmanship and poor design for the period specified in commercial terms and conditions.

9.2 Performance:

The equipment shall be guaranteed for satisfactory performance at all operating conditions specified in the data sheet and performance curve. Field checks on performance, when made by the purchaser, shall be made within the agreed time of initial operation.

9.3 Vendor shall specifically guarantee at rated flow the following.

a) Differential head at rated point with no negative tolerance.

b) NPSHR at rated point with zero tolerance.

c) Rated Power consumption with max +4% tolerances.

d) Vibration and noise level.

Above tolerance are exclusive of instrument tolerances.

9.4 Unless mentioned otherwise in the commercial conditions, performance guarantee and warranty shall be valid for 12 months from the date of commissioning or 18 months from the date of supply, whichever is earlier.

APPENDIX – 1

DRAWINGS & DOCUMENTS SCHEDULE

Along with Offer	After Order / LOI	Description
		Pumps:
X	X	1) Pump GA drawing with foundation details
X	X	2) Cross sectional drawing with bill of material
X	X	3) Performance curves
X	X	4) Pump specification sheet with complete details in the proforma enclosed with RFQ
X	X	5) Shaft seal drawing with bill of material
X	X	6) Shaft coupling drawing with bill of material including allowable misalignment, clearances, shaft bores and keyways dimensions with tolerances
	X	7) Cooling & heating schematic and bill of material including cooling & heating media, fluid flows, pressure, pipe & valve sizes, instrumentation, orifice sizes and piping arrangement drawings
	X	8) Electrical & instrumentation schematics, wiring diagrams and bill of material
	X	9) Electrical & instrumentation arrangement drawing and list of components
X		10) Reference list of pumps supplied in past for similar duty conditions. Reference list shall contain complete address of user, user's purchase order number, specifications and date of commissioning
	X	11) QAP (Quality Assurance Plan)
	X	12) Material test certificates
	X	13) Test and Inspection reports
	X	14) Instruction manuals describing installation, operation, and maintenance procedures
X		15) Spare parts recommendation and price list
		DRIVER:
		As per driver specification enclosed with Tender

		INSTRUMENTATION:	
		As per instrumentation specification enclosed with Tender	
		Note: X- Applicable	

MECHANICAL DATA SHEET FOR EOT CRANE

EJB-2026-02-030-MEC-MDS-001

REV.	DATE	PURPOSE	BY	CHECKED	APPROVED
			Pankaj S		
1	28-10-2026	REVISED EOT CAPACITY FROM 20 TO 10 TONS	PC	RBP	VJS
0	14-10-2026	ISSUED FOR APPROVAL	PC	RBP	VJS

TABLE OF CONTENTS

1. SCOPE 3
2. PROJECT INFORMATION: 3
3. TO FIRM UP THE SPECIFICATION FOR BUYING EOT CRANE FOR FABRICATION SHED 3
4. INSPECTION AND TESTING 6
5. PACKING & FORWARDING 6
6. GUARANTEES: 6
7. DELIVERABLE REQUIRED FROM VENDOR: 6

1. SCOPE

To Design, Manufacture, Test & Supply of EOT Crane in Fabrication shop for industrial application. The design & input parameter is mentioning the below:

2. PROJECT INFORMATION:

1. General Information

Parameter	Details
Purchaser	SUN PETROCHEMICALS PVT LTD.
Consultant	Navitera Consultants Pvt Ltd
Plant	Bhaskar-I Field, Khambhat, Gujarat
Location	Khambhat, Gujarat
Installation	Indoor
Area Classification Utilities	Hazardous, Dusty
Electricity Supply	415 V ± 6%, 50 Hz ± 3%, 3-Phase AC
Control Panel Power Supply	220 V, 50 Hz, Single-Phase AC

2. Site Information

Parameter	Details
Altitude	8 m above MSL
Ambient Temperature	Max. 45°C / Min. 12°C
Humidity	Max. 90% / Min. 35%
Seismic Condition / Zone	Zone III (IS 1893)
Average Wind Speed	169.2 km/hr

3. To firm up the Specification for buying EOT crane for Fabrication shed

(Refer the below detail)

- The crane bridge shall consist of Double bridge girder carrying two wheels at each end of the span. The girder shall have enough strength to carry the test load without carrying undue stress or deflection. All materials supplied by the contractors shall be of recent manufacture free from defects, mill scales, lamination, pitting, flakes, rust, etc. The crane bridge shall be generally as per I.S.800.
- Long travel bridge shall be rim toughened, heat-treated carbon steel. They shall be double flanged type; wheel shall have antifriction ball/roller bearings as per I.S.2613. Wheel shall be machined on their treads to match the runway rail section. The bridge shall have a gear shaft and pulley, connection to opposite wheels of the span, to achieve long travel motion of the bridge by means of chain, supplied from the floor.

- The traveling trolley frame shall be made of rolled steel. The side plates of trolley frame shall extend beyond wheel flanges. Thus, providing bumper protection from the wheels. The two-side plate shall be connected by means of an equalizing pin. Axle and shafts shall be made of carbon steel and shall be accurately machined and properly supported.
- The EOT crane shall be supplied with the full-length platform at drive side if required. The crane shall have idler side platform for maintenance purpose. Hooting and flashing system shall be provided when crane undergoes any operation for safety purpose.

Cross Travel Trolley Crab & Hoist

- The cross-travel trolley shall consist of two wheels at each end running on the main girder of the crane. Trolley track wheels shall be rim toughened, heat-treated carbon steel and shall be single flanged and shall have antifriction ball bearings. The wheel shall be aligned on their treads to match the flanges of the rack joints.
- Electric hoist shall be complete with the hoisting motor, travel motor, wire rope drum, wire rope, hooks, necessary gearing, sheaves, electromagnetic brakes for hoisting and traveling motors, weatherproof contactor panel, all wiring, flexible trailing cables, limit switches, traveling stops for fixing on the girders, earth terminals and other accessories to meet the requirements. Electric hoist shall be generally as per I.S.3938. The scope of the work also includes all cabling between Switchgear control panel, electric hoist and cross travel motors.
- Rope drum shall be either cast or welded to sustain concentrated loads resulting from the rope pull; drum shall be machine grooved, right and left, with the grooves of proper shape for the rope used.
- Gear shall be cut from solid cast or forged steel blanks and pinion shall be heat treated alloy steel. Gears shall be as per B.S.436. All the gearing shall be totally enclosed, proper lubricating arrangements shall be provided for gearing and pinions.
- Hoist rope shall be extra flexible improved plug steel rope with well lubricated hemp core and having suitable construction to lift the load with the rated ultimate tensile strength as per standard. Rope shall be fastened to the drum with an attachment having strength equal to that of the ropes.
- Hooks shall be solid forged, heat-treated alloy or carbon steel of rugged construction. They shall be of a single hook type provided with a standard depressed type safety latch. They shall swivel and operate on ball or roller thrust bearings with hardened races. Locks to prevent hook from swivelling shall be provided. Hook shall be as per B.S.2903. Trolley and hoisting motor shall be equipped with electrically released, spring set, fiction shoe type brakes having torque capable of holding 125% of the full rates hook load. Electric motor shall be hoist duty, squirrel cage, TEFC induction motor with high starting torque, half an hour rates and operated at 415 V, 3 phase, 50 cycle electric supply.
- The hoist and travel motion shall be controlled from pendant type push button station. The push button shall be recessed type house in a die cast aluminium body suspended from the hoist and supported by G.I. wire ropes. The pendant shall operate at a voltage of 24 V single phase A.C. and shall incorporate a key operated switch to prevent unauthorized operations.

The following shall be provided on the pendant.

- ✓ 'ON' – indicating lamp
- ✓ Cross Travel Push button – Left & Right
- ✓ Hoist Push Button – Raise & Lower
- ✓ Micro Hoist Push Button – Raise & Lower
- ✓ All stop push button

- Flexible multi core copper conductor cable shall be provided between control panel & pendant.
- Overload test at 125% of the rated load shall be carried out as per I.S.3938 at manufacturing works in presence of the Engineer.
- The supporting 'I' beams for the hoist have to be provided with proper alignment & level along with required base plate on the constructed beam which is already been executed by the civil contractor.

Technical Specification for 10 Ton EOT crane (Rev-1)

Sr. No.	Part Component/Parameters	Standards/Required Parameters
	Location	Pump Shed
1)	Type	Double girder as per manufacturer's std.
2)	Rated capacity	10 Ton S.W.L. (Rev-1)
3)	Quantity	1 Nos.
4)	Span	15 m
5)	Runway length	50 m
6)	Maximum head room available (from top of the rail to lower end of the beam)	1000 mm
7)	Lift (Below Hook)	7.5 m (Rev-1)
8)	No. of falls	4 (Minimum)
9)	Runway rail	Square steel bar minimum 50 x 40 mm or as per manufacturer
10)	Operating speed with the rate loads	
i)	Hoist	4 Mtrs / Min or as per mfg. std.
ii)	Micro hoisting speed	10% of the main speed for all three motions.
iii)	Cross travel	15 Mtrs. / Min or as per mfg. std.
iv)	Long travel	20 mtrs/Min or as per mfg. std.
11)	Type of Service	Indoor duty
12)	Maximum Deflection	as per mfg. std
13)	Duty Classification	M5 ISO

- The Gear Boxes shall be guaranteed for satisfactory performance.
- Chain / Hook for hoisting shall confirm to the Indian standard specification.

- Crane and its components shall be designed / confirm to the codes of practice in force and the highest standards of workmanship and materials.
- Safety Standards relevant to Overhead Hoist operation shall be complied with.
- Painting: Shot Blasting + 1 coat Epoxy Primer+ 2 Coat PU Paint = 100 µDFT

4. INSPECTION AND TESTING

The client/authorized representative shall carry out stage wise and final inspection. Quality Assurance plan covering the scope of supply will be finalized immediately on placement of order. Tests shall be carried out at vendor's shop/at site as mutually agreed upon.
Calibrated Instruments shall be used for Inspection & Testing of equipment's & valid calibration certificate shall be produced for record.
Any deviation/defect will be rectified/replaced free of cost on vendor's account.

5. PACKING & FORWARDING

After the components are tested all exposed surfaces shall be suitably processed and painted with approved type of easily removable protective compound.
Unmachined metal exterior surface shall be given two coats of zinc chromium paint followed by finish epoxy painting.
All delicate components shall be packed separately with proper tag marking.
Unit shall be packed in a wooden case.
The tag number of the item shall be prominently painted on the unit.
The vendor shall arrange to unload all equipment's at site and store at a designated place.
The quoted price should include delivery charges accordingly.

6. GUARANTEES:

Vendor to give guarantee for workmanship for a period of 12 months from date of commissioning or 18 months from date of dispatch, whichever is earlier.

7. Deliverable required from Vendor:

1. **Static & Dynamic loading (For PEB structure Design)**
   - ✓ Trolley Wt -Carriage
   - ✓ Bridge Wt
   - ✓ Wheel Spacing-Carriage (Centre to Centre distance)
   - ✓ Bumper Distance - Carriage (Outer to Outer distance)
   - ✓ Headroom
   - ✓ Horizontal Clearance
   - ✓ Wheel Load
2. **Crane GA drawing**
3. **Carne Panel Drawing**
4. **Wiring Drawing**
5. **Vendor to provide Make list of Component.**

NAVITERA

REQUEST FOR QUOTATION (RFQ)
ITEM : API PUMPS
TAG NO: AS PER PDS
TOTAL QTY : AS PER PDS

Sht 1 OF 1

RFQ NUMBER	EJB-2026-02-030-MEC-MRS-001

ALWAYS QUOTE THIS NUMBER AS OUR REFERENCE

CLIENT	PROJECT	VENDOR	MATERIAL REQUIRED AT DESTINATION LATEST BY:
SUN PETROCHEMICALS PVT. LTD.	NEW CRUDE OIL TANK FARM PUMP HOUSE AT CPF		DELIVERY ITEM NO.

ALL ATTACHMENT MENTIONED HEREIN ARE INTERNAL PART OF THIS REQUISITION AND MUST BE CONSIDERED

LIST OF ATTACHMENTS

SR. NO.	DOCUMENT NUMBER & DESCRIPTION		REVISION NUMBER OF THE REQUISITION 0	1	2	3	4
1	**Mechanical**						
(a)	EJB-2026-02-030-MEC-GEN-002	General Specification for Centrifugal Pump (API)	0				
(b)	EJB-2026-02-030-MEC-GEN-003	General Specification for Gear Pump (API)	0				
(c)	SUNPETRO/QPS/SC/001	Surface coating	0				
(d)	EJB-2026-02-030-MEC-GEN-001	Spare list	0				
(e)							
(f)							
(g)							
(h)							
(i)							
2	**Process**						
(a)	EJB-2026-02-030-PRO-PDS-001	Process datasheet Cum Mechanical Data sheet for Tank Bottom Recycle Pump	0				
(b)	EJB-2026-02-030-PRO-PDS-002	Process datasheet Cum Mechanical Data sheet for Pump House Drain Pit Oil Lifting Pump	0				
(c)							
(d)							
(e)							
(f)							
3	**Electrical**						
(a)	EJB-2026-02-030-ELE-DS-001	Data sheet for LV FLP Motor	0				
4	**Instrument**						
(a)							

NOTES:

1 All revisions of the material requisition and its attachments shall be retained.
In case of change, only revised pages of attachments will be issued except while issuing order.

2 All changes described on the `change description' summarize revisions only.

3 Vendor is requested to submit duly filled MDS in PDF & excel format, attached with RFQ failing which the offer may be considered as technically incomplete & rejected.

Rev	Date	Description	Prepd. by	Chkd By	App. By
0	12-10-2026	Issued for Enquiry	PC	RBP	VJS

VALVE MATERIAL SPECIFICATION

CONTENTS:-

Sr. No.	Description	Sheet No
1	VALVE MATERIAL SPECIFICATION - A3A	2 of 32
2	VALVE MATERIAL SPECIFICATION - B7A	9 of 32
3	VALVE MATERIAL SPECIFICATION - B7A	21 of 32

0	08.10.26	ISSUED FOR ENGINEERING	PC	RBP	VJS
REV	DATE	PURPOSE	BY	CHK.	APPR.

sun Petrochemicals	**SPECIFICATION FOR VALVE**	NAVITERA
DOC. NO. : EJB-2026-02-030-PIP-MDS-001	**CLIENT : SUN PETROCHEMICALS PVT LTD**	
PROJECT NO. : EJB-2026-02-030	**PROJECT : NEW CRUDE OIL PUMP HOUSE AT CPF**	

VALVE MATERIAL SPECIFICATION
A3A

CONTENTS:-

Sr. No.	Description
1	Cover Sheet
2	Specification for Ball Valve, 15-300 NB
3	Specification for Gate Valve, 15-40 NB
4	Specification for Gate Valve, 50-300 NB
5	Specification for Globe Valve, 50-300 NB
6	Specification for Check Valve, 15-40 NB
7	Specification for Check Valve, 50-300 NB

			Pankaj S	Rakesh Bhanushali	
0	08.10.26	ISSUED FOR ENGINEERING	PC	RBP	VJS
REV	**DATE**	**PURPOSE**	**BY**	**CHK.**	**APPR.**

		BALL VALVE SPECIFICATION			
DOC. NO. : EJB-2026-02-030-PIP-MDS-001			**CLIENT : SUN PETROCHEMICALS PVT LTD**		
PROJECT NO. : EJB-2026-02-030			**PROJECT : NEW CRUDE OIL PUMP HOUSE AT CPF**		
Class	A3A	**Size Range**	15 to 300 NB	**Design Standard**	ISO 17292
Rating	150#	**Service**	DL,FG,HOD,HOR,SG	**Testing Standard**	API 598; API 607
End to End Dimension	ASME B16.10			**Design Conditions**	Pressure: 10 kg/cm² g/ FV
					Temperature: 150 °C

		Specification	**Vendor offer**
Construction	Type	Reduce Bore , bidirectional	
	Ends	Flanged, RF, 150#, as per ASME B16.5, 125-250 µinch AARH, conc. serration	
	Antistatic Device	Yes	
	Blowout-Proof Stem	Yes	
	Ball Mounting	Floating ball (Trunion Mounted for size ≥ 250 NB)	
	Operation	By lever/wrench (Gear Operated for size ≥ 150 NB)	
	Secondary Seat	Metal seat, for services that require fire safe	
	Fire Safe	Yes	
	Cavity Filled Body Seat	Yes	
Material	Body	ASTM A 216 Gr. WCB	
	Stem	SS304 (no casting)	
	Ball	SS304	
	Seat	PTFE	
	Gland	SS304	
	Gland Packing	Grafoil	
	Body Stud-Nuts	ASTM A 193 Gr. B7/ A 194 Gr. 2H	
	Lever/ Wrench	CS with PVC cover	
Tests	Pressure Test (Hydro)	Body: 30 bar (g) Seat: 22 bar (g)	
	Pneumatic Test (Seat)	6 bar (g)	
	Radiography	Yes	
	Fire Test	As per API 607 (for services that require fire safe)	
	Intergranular Corrosion Test	Not applicable	
	Inspection By	Third Party (Final Inspection)	
	Seat Leakage Rate	As per API-598 or ASME/FCI 70-2 CLASS V	

NOTES:

1 Vendor to give guarantee for satisfactory workmanship & operation of valve for 18 Months from the supply or 12 Months from operation, whichever is earlier.
2 Vendor to give the dimension & sectional drawing for valve & get it approved prior to manufacture.
3 Vendor to give 3 copies of Material T/C, Hydrostatic & Pneumatic Test Pressure T/C.
4 Vendor to offer ball valve with PTFE soft-seat which can with stand given test pressure
5 Surface Protection- Prime Coat: Chlorine free with modified alkyd resin unobjectionable in physiological & toxicological respect. Additional External Coating : Silver Streak Aluminium Paint suitable for corrosive environment.
6 Gland shall be suitable for repacking under pressure when the valve is fully open.

LEGENDS:

DL DIESEL
FG FUEL GAS
HOS Hot Oil Supply
HOR Hot Oil Return
SG SERVO GAS

		GATE VALVE SPECIFICATION			
DOC. NO. : EJB-2026-02-030-PIP-MDS-001			**CLIENT : SUN PETROCHEMICALS PVT LTD**		
PROJECT NO. : EJB-2026-02-030			**PROJECT : NEW CRUDE OIL PUMP HOUSE AT CPF**		
Class	A3A	**Size Range**	15 to 40 NB	**Design Standard**	API 602
Rating	800#	**Service**	DL,FG,HOD,HOR,SG	**Testing Standard**	API 598
End to End Dimension	Mnf. Std.			**Design Conditions**	Pressure: 10 kg/cm² g/ FV
					Temperature: 150 °C

		Specification	**Vendor offer**
Construction	Type	OS & Y	
	Ends	Socket weld, 800# as per ASME B16.11	
	Bonnet	Bolted	
	Wedge	Solid	
	Body Seat Ring	Renewable	
	Back Seat	Integral	
	Bypass	-	
	Wedge Seat	Integral	
	Stem	Rising	
	Operation	Hand Wheel (Non Rising)	
Material	Body & Bonnet	ASTM A 105	
	Stem	13% Cr Steel (no casting)	
	Wedge	SS304	
	Body Seat Ring	SS304	
	Yoke/Yoke Bush	ASTM A 105	
	Bonnet Gasket	Spiral wound, SS316 + Graphite	
	Bolts & Nuts	ASTM A 193 Gr. B7 / A 194 Gr. 2H	
	Gland Flange	ASTM A 105	
	Stem Packing	Grafoil Rings	
	Hand Wheel	Malleable Iron or Steel	
Tests	Pressure test (hydro)	Body: 207 bar (g) Seat: 152 bar (g)	
	Pneumatic test (seat)	6 bar (g)	
	Radiography	-	
	Intergranular corrosion test	Not applicable	
	Inspection by	Third Party (Final Inspection)	
	Seat leakage rate	As per API-598 or ASME/FCI 70-2 CLASS V	

NOTES:

1 Vendor to give guarantee for satisfactory workmanship & operation of valve for 18 Months from the supply or 12 Months from operation, whichever is earlier.

2 Vendor to give the dimension & sectional drawing for valve & get it approved prior to manufacture.

3 Vendor to give 3 copies of Material T/C, Hydrostatic & Pneumatic Test Pressure T/C.

4 Gland shall be suitable for re-packing under pressure when valve is fully open.

5 Surface Protection- Prime Coat: Chlorine free with modified alkyd resin unobjectionable in physiological & toxicological respect. Additional External Coating : Silver Streak Aluminium Paint suitable for corrosive environment.

LEGENDS:

DL DIESEL
FG FUEL GAS
HOS Hot Oil Supply
HOR Hot Oil Return
SG SERVO GAS

			GATE VALVE SPECIFICATION			
DOC. NO. : EJB-2026-02-030-PIP-MDS-001			**CLIENT: SUN PETROCHEMICALS PVT LTD**			
PROJECT NO. : EJB-2026-02-030			**PROJECT: NEW CRUDE OIL PUMP HOUSE AT CPF**			
Class	A3A	Size Range	50 to 300 NB	Design Code	API 600	
Rating	150#	Service	DL,FG,HOD,HOR,SG	Testing Code	API 598	
End to End Dimension	ASME B16.10			Design Conditions	Pressure: 10 kg/cm² g/ FV	
					Temperature: 150 °C	
			Specifications		**Vendor offer**	
Construction		Type	OS & Y			
		Ends	Flanged, RF, 150# as per ASME B16.5, 125-250 µAARH (Conc. Serration)			
		Stem	Rising			
		Bonnet	Bolted			
		Wedge	Flexible			
		Body Seat	Renewable			
		Back Seat	Yes			
		Bypass	-			
		Wedge Seat	Integral			
		Operation	Handwheel (Gear ope. for 300 NB & above)			
Material		Body & Bonnet	ASTM A 216 Gr. WCB			
		Stem	13% Cr Steel			
		Wedge	ASTM A 216 Gr. WCB			
		Wedge Facing	13% Cr Steel			
		Back Seat Bush	13% Cr Steel			
		Body Seat Ring	13% Cr Steel			
		Yoke/Yoke Bush	ASTM A 216 Gr. WCB/ A 439 Gr. D2C			
		Bonnet Gasket	Spiral wound gasket, SS304 + PTFE			
		Bolts & Nuts	ASTM A 193 Gr. B7/ A 194 Gr. 2H			
		Gland/ Flange	13 % Cr Steel/ ASTM A 105			
		Gland Packing	PTFE			
		Handwheel	Malleable Iron or Steel			
Tests		Pressure Test (Hydro)	Body: 30 bar(g) Seat: 22 bar(g)			
		Pneumatic Test (Seat)	6 bar (g)			
		Radiography	Yes			
		Intergranular Corrosion Test	-			
		Inspection By	Third Party (Final Inspection)			
		Seat Leakage Rate	As Per API-598 or ANSI/FCI 70-2 CLASS V			

NOTES:

1 Vendor to give guarantee for satisfactory workmanship & operation of valve for 18 Months from the supply or 12 Months from operation, whichever is earlier.
2 Vendor to give the dimension & sectional drawing for valve & get it approved prior to manufacture.
3 Vendor to give 3 copies of Material T/C, Hydrostatic & Pneumatic Test Pressure T/C.
4 Gland shall be suitable for re-packing under pressure when valve is fully open.
5 Surface Protection- Prime Coat: Chlorine free with modified alkyd resin unobjectionable in physiological & toxicological respect. Additional External Coating : Silver Streak Aluminium Paint suitable for corrosive environment.

LEGENDS:

DL DIESEL
FG FUEL GAS
HOS Hot Oil Supply
HOR Hot Oil Return
SG SERVO GAS

			GLOBE VALVE SPECIFICATION		
DOC. NO. : EJB-2026-02-030-PIP-MDS-001			**CLIENT : SUN PETROCHEMICALS PVT LTD**		
PROJECT NO. : EJB-2026-02-030			**PROJECT : NEW CRUDE OIL PUMP HOUSE AT CPF**		
Class	A3A	**Size Range**	50 to 300 NB	**Design Standard**	BS 1873
Rating	150#	**Service**	DL,FG,HOD,HOR,SG	**Testing Standard**	API 598
End to End Dimension	ASME B16.10			**Design Conditions**	Pressure: 10 kg/cm² g/ FV
					Temperature: 150 °C

		Specification	**Vendor offer**
Construction	Type	OS & Y	
	Ends	Flanged, RF, 150#, as per ASME B16.5, 125-250 µinch AARH, conc. serration	
	Stem	Rising	
	Bonnet	Bolted	
	Disc	Plug-type	
	Body Seat Ring	Renewable	
	Back Seat	Yes	
	Bypass	-	
	Disc Seat	Integral	
	Operation	Handwheel (Gear operated for 250 NB & above)	
Material	Body & Bonnet	ASTM A 216 Gr. WCB	
	Stem	13% Cr steel (no casting)	
	Disc	ASTM A 216 Gr. WCB	
	Disc Facing	13% Cr Steel	
	Back Seat & Shoulder	13% Cr Steel	
	Body Seat Ring	ASTM A 216 Gr. WCB +13% Cr steel facing	
	Yoke/Yoke Bush	ASTM A 216 Gr. WCB/ A 439 Gr. D2C	
	Bonnet Gasket	Spiral wound gasket, SS316 + graphite	
	Bolts & Nuts	ASTM A 193 Gr. B7/ A 194 Gr. 2H	
	Gland Flange	ASTM A 105	
	Gland Packing	Grafoil	
	Handwheel	Malleable Iron or Steel	
Tests	Pressure test (hydro)	Body: 30 bar (g) Seat: 22 bar (g)	
	Pneumatic test (seat)	6 bar (g)	
	Radiography	Yes	
	Intergranular corrosion test	Not applicable	
	Inspection by	Third Party (Final Inspection)	
	Seat leakage rate	As per API-598 or ASME/FCI 70-2 CLASS V	

NOTES:

1 Vendor to give guarantee for satisfactory workmanship & operation of valve for 18 Months from the supply or 12 Months from operation, whichever is earlier.

2 Vendor to give the dimension & sectional drawing for valve & get it approved prior to manufacture.

3 Vendor to give 3 copies of Material T/C, Hydrostatic & Pneumatic Test Pressure T/C.

4 Gland shall be suitable for re-packing under pressure when valve is fully open.

5 Surface Protection- Prime Coat: Chlorine free with modified alkyd resin unobjectionable in physiological & toxicological respect. Additional External Coating : Silver Streak Aluminium Paint suitable for corrosive environment.

LEGENDS:

DL DIESEL
FG FUEL GAS
HOS Hot Oil Supply
HOR Hot Oil Return
SG SERVO GAS

			CHECK VALVE SPECIFICATION		
DOC. NO. : EJB-2026-02-030-PIP-MDS-001			**CLIENT : SUN PETROCHEMICALS PVT LTD**		
PROJECT NO. : EJB-2026-02-030			**PROJECT : NEW CRUDE OIL PUMP HOUSE AT CPF**		
Class	A3A	**Size Range**	15 to 40 NB	**Design Standard**	ISO 15761
Rating	150#	**Service**	DL,FG,HOD,HOR,SG	**Testing Standard**	API 598
End to End Dimension	MNF STD			**Design Conditions**	Pressure: 10 kg/cm² g/ FV
					Temperature: 150 °C

		Specification	**Vendor offer**
Construction	Type	Lift type	
	Ends	Flanged, RF, 150#, as per ASME B16.5, 125-250 µinch AARH, conc. serration	
	Cover	Bolted	
	Piston/ Ball	Spring-loaded	
	Body Seat Ring	Renewable	
	Port	Standard	
Material	Body	ASTM A 216 Gr. WCB	
	Cover	ASTM A 216 Gr. WCB	
	Piston/ Ball	13% Cr Steel/ Stellited	
	Seat Ring	13% Cr Steel/ Stellited	
	Spring	SS316	
	Gasket	Spiral wound, SS316 + Grafoil	
	Bolts & Nuts	ASTM A 193 Gr. B7/ A 194 Gr. 2H	
Tests	Pressure Test (Hydro)	Body: 30 bar (g) Seat: 22 bar (g)	
	Pneumatic Test (Seat)	6 bar (g)	
	Radiography	Yes	
	Intergranular Corrosion Test	Not applicable	
	Inspection By	Third Party (Final Inspection)	
	Seat Leakage Rate	As per API-598 or ASME/FCI 70-2 Class V	

NOTES:

1 Vendor to give guarantee for satisfactory workmanship & operation of valve for 18 Months from the supply or 12 Months from operation, whichever is earlier.

2 Vendor to give the dimension & sectional drawing for valve & get it approved prior to manufacture.

3 Vendor to give 3 copies of Material T/C, Hydrostatic & Pneumatic Test Pressure T/C.

4 Surface Protection- Prime Coat: Chlorine free with modified alkyd resin unobjectionable in physiological & toxicological respect. Additional External Coating : Silver Streak Aluminium Paint suitable for corrosive environment.

LEGENDS:

DL DIESEL
FG FUEL GAS
HOS Hot Oil Supply
HOR Hot Oil Return
SG SERVO GAS

		CHECK VALVE SPECIFICATION			
DOC. NO. : EJB-2026-02-030-PIP-MDS-001			**CLIENT : SUN PETROCHEMICALS PVT LTD**		
PROJECT NO. : EJB-2026-02-030			**PROJECT : NEW CRUDE OIL PUMP HOUSE AT CPF**		
Class	A3A	**Size Range**	50 to 300 NB	**Design Standard**	API 594
Rating	150#	**Service**	DL,FG,HOD,HOR,SG	**Testing Standard**	API 598
End to End Dimension	ASME B16.10			**Design Conditions**	Pressure: 10 kg/cm² g/ FV
					Temperature: 150 °C

		Specification	**Vendor offer**
Construction	Type	Swing Disc	
	Ends	Flanged, RF, 150#, as per ASME B16.5, 125-250 µinch AARH, conc. serration	
	Cover	Bolted	
	Disc	Solid	
	Body Seat	Renewable	
	Disc Seat	Renewable	
Material	Body	ASTM A 216 Gr. WCB	
	Cover	ASTM A 216 Gr. WCB	
	Disc	ASTM A 216 Gr. WCB	
	Disc Facing	13% Cr steel	
	Seat Ring	13% Cr steel	
	Disc Hinge	13% Cr steel	
	Hinge Pin	13% Cr steel (no casting)	
	Gasket	Spiral wound, SS316 + Grafoil	
	Bolts & Nuts	ASTM A 193 Gr. B7/ A 194 Gr. 2H	
	Disc Nut & Lock Nut	AISI 410	
Tests	Pressure test (hydro)	Body: 30 bar (g) Seat: 22 bar (g)	
	Pneumatic test (seat)	6 bar (g)	
	Radiography	Yes	
	Intergranular corrosion test	Not applicable	
	Inspection by	Third Party (Final Inspection)	
	Seat leakage rate	As per API-598 or ASME/FCI 70-2 CLASS V	

NOTES:

1 Vendor to give guarantee for satisfactory workmanship & operation of valve for 18 Months from the supply or 12 Months from operation, whichever is earlier.

2 Vendor to give the dimension & sectional drawing for valve & get it approved prior to manufacture.

3 Vendor to give 3 copies of Material T/C, Hydrostatic & Pneumatic Test Pressure T/C.

4 Surface Protection- Prime Coat: Chlorine free with modified alkyd resin unobjectionable in physiological & toxicological respect. Additional External Coating : Silver Streak Aluminium Paint suitable for corrosive environment.

LEGENDS:

DL DIESEL
FG FUEL GAS
HOS Hot Oil Supply
HOR Hot Oil Return
SG SERVO GAS

VALVE MATERIAL SPECIFICATION
B7A

CONTENTS:-

Sr. No.	Description
1	Cover Sheet
2	Specification for Ball Valve (Reduce Bore/Full Bore), 15-40 NB
3	Specification for Ball Valve (Reduce Bore/Full Bore), 50-300 NB
4	Specification for Gate Valve, 15-40 NB, Socket Weld
5	Specification for Gate Valve, 15-40 NB
6	Specification for Gate Valve, 50-300 NB
7	Specification for Globe Valve, 15-40 NB, Socket Weld
8	Specification for Globe Valve, 15-300 NB
9	Specification for Check Valve, 15-40 NB
10	Specification for Check Valve, 50-300 NB

			Pankaj S		
0	08.10.26	ISSUED FOR APPROVAL	PC	RBP	VJS
REV	**DATE**	**PURPOSE**	**BY**	**CHK.**	**APPR.**

			BALL VALVE SPECIFICATION			
DOC. NO. : EJB-2026-02-030-PIP-MDS-001				**CLIENT : SUN PETROCHEMICALS PVT LTD**		
PROJECT NO. : EJB-2026-02-030				**PROJECT : NEW CRUDE OIL PUMP HOUSE AT CPF**		
Class		B7A	**Size Range**	15 to 40 NB	**Design Standard**	ISO 17292
Rating		300#	**Service**	EO2,HO,PL,PV,WF1	**Testing Standard**	API 598; API 607
End to End Dimension		ASME B16.10			**Design Conditions**	Pressure: 45 kg/cm² g
						Temperature: 120 °C
				Specification		**Vendor offer**
Construction		Type		Reduce Bore (2 piece), Bidirectional		
		Ends		Flanged, RF, 300#, as per ASME B16.5, 125-250 µinch AARH, conc. serration		
		Antistatic Device		Yes		
		Blowout-Proof Stem		Yes		
		Ball Mounting		Floating ball		
		Cavity Filled Body Seat		Yes		
		Secondary Seat		Metal seat		
		Fire Safe		Yes		
		Operation		By lever/wrench (Gear Operated for size ≥ 150 NB)		
Material		Body		ASTM A 216 Gr. WCB/A 105		
		Stem		SS316		
		Ball		SS316		
		Seat		RPTFE		
		Gland		SS316		
		Gland Packing		Grafoil		
		Body Stud-Nuts		ASTM A 193 Gr. B7/ A 194 Gr. 2H		
		Lever/ Wrench		CS with PVC cover		
Tests		Pressure Test (Hydro)		Body: 72 bar (g) Seat: 53 bar (g)		
		Pneumatic Test (Seat)		6 bar (g)		
		Radiography		Yes		
		Fire Test		As per API-607		
		Intergranular Corrosion Test		Not applicable		
		Inspection By		Third Party (Final Inspection)		
		Seat Leakage Rate		As per API-598 or ASME/FCI 70-2 CLASS V		

NOTES:

1 Vendor to give guarantee for satisfactory workmanship & operation of valve for 18 Months from the supply or 12 Months from operation, whichever is earlier.

2 Vendor to give the dimension & sectional drawing for valve & get it approved prior to manufacture.

3 Vendor to give 3 copies of Material T/C, Hydrostatic & Pneumatic Test Pressure T/C.

4 Vendor to offer ball valve with RPTFE soft-seat which can with stand given test pressure

5 Surface Protection- Prime Coat: Chlorine free with modified alkyd resin unobjectionable in physiological & toxicological respect. Additional External Coating : Silver Streak Aluminium Paint suitable for corrosive environment.

LEGENDS:

EO2 EXPORT OIL
HO HEAVY OIL
PL PROCESS LIQUID
PV PROCESS VAPOUR
WF1 WELL FLUID

		BALL VALVE SPECIFICATION			
DOC. NO. : EJB-2026-02-030-PIP-MDS-001			**CLIENT : SUN PETROCHEMICALS PVT LTD**		
PROJECT NO. : EJB-2026-02-030			**PROJECT : NEW CRUDE OIL PUMP HOUSE AT CPF**		
Class	B7A	**Size Range**	15 to 40 NB	**Design Standard**	ISO 17292
Rating	300#	**Service**	EO2,HO,PL,PV,WF1	**Testing Standard**	API 598; API 607
End to End Dimension	ASME B16.10			**Design Conditions**	Pressure: 45 kg/cm² g
					Temperature: 120 °C
			Specification		**Vendor offer**
Construction	Type		Full Bore (2 piece), Bidirectional		
	Ends		Flanged, RF, 300#, as per ASME B16.5, 125-250 µinch AARH, conc. serration		
	Antistatic Device		Yes		
	Blowout-Proof Stem		Yes		
	Ball Mounting		Floating ball		
	Cavity Filled Body Seat		Yes		
	Secondary Seat		Metal seat		
	Fire Safe		Yes		
	Operation		By lever/wrench (Gear Operated for size ≥ 150 NB)		
Material	Body		ASTM A 216 Gr. WCB/A 105		
	Stem		SS316		
	Ball		SS316		
	Seat		RPTFE		
	Gland		SS316		
	Gland Packing		Grafoil		
	Body Stud-Nuts		ASTM A 193 Gr. B7/ A 194 Gr. 2H		
	Lever/ Wrench		CS with PVC cover		
Tests	Pressure Test (Hydro)		Body: 72 bar (g) Seat: 53 bar (g)		
	Pneumatic Test (Seat)		6 bar (g)		
	Radiography		Yes		
	Fire Test		As per API-607		
	Intergranular Corrosion Test		Not applicable		
	Inspection By		Third Party (Final Inspection)		
	Seat Leakage Rate		As per API-598 or ASME/FCI 70-2 CLASS V		

NOTES:

1 Vendor to give guarantee for satisfactory workmanship & operation of valve for 18 Months from the supply or 12 Months from operation, whichever is earlier.

2 Vendor to give the dimension & sectional drawing for valve & get it approved prior to manufacture.

3 Vendor to give 3 copies of Material T/C, Hydrostatic & Pneumatic Test Pressure T/C.

4 Vendor to offer ball valve with RPTFE soft-seat which can with stand given test pressure

5 Surface Protection- Prime Coat: Chlorine free with modified alkyd resin unobjectionable in physiological & toxicological respect. Additional External Coating : Silver Streak Aluminium Paint suitable for corrosive environment.

LEGENDS:

EO2 EXPORT OIL
HO HEAVY OIL
PL PROCESS LIQUID
PV PROCESS VAPOUR
WF1 WELL FLUID

			BALL VALVE SPECIFICATION			
DOC. NO. : EJB-2026-02-030-PIP-MDS-001			**CLIENT : SUN PETROCHEMICALS PVT LTD**			
PROJECT NO. : EJB-2026-02-030			**PROJECT : NEW CRUDE OIL PUMP HOUSE AT CPF**			
Class	B7A	**Size Range**	50 to 300 NB	**Design Standard**	API 608	
Rating	300#	**Service**	EO2,HO,PL,PV,WF1	**Testing Standard**	API 598; API 607	
End to End Dimension	ASME B16.10			**Design Conditions**	Pressure: 45 kg/cm² g	
					Temperature: 120 °C	
			Specification		**Vendor offer**	
Construction		Type	Full Bore (2 piece), Bidirectional			
		Ends	Flanged, RF, 300#, as per ASME B16.5, 125-250 µinch AARH, conc. serration			
		Antistatic Device	Yes			
		Blowout-Proof Stem	Yes			
		Ball Mounting	Floating Ball (Trunnion mounted ≥ 150NB)			
		Cavity Filled Body Seat	Yes			
		Secondary Seat	Metal seat			
		Fire Safe	Yes			
		Operation	By lever/wrench (Gear Operated for size ≥ 150 NB)			
Material		Body	ASTM A 216 Gr. WCB			
		Stem	AISI 410/SS316			
		Ball	A182/SS316			
		Seat	RPTFE			
		Spring	Inconel			
		Gland Packing	Grafoil			
		Body Stud-Nuts	ASTM A 193 Gr. B7/ A 194 Gr. 2H			
		Lever/ Wrench	CS with PVC cover			
Tests		Pressure Test (Hydro)	Body: 72 bar (g) Seat: 53 bar (g)			
		Pneumatic Test (Seat)	6 bar (g)			
		Radiography	Yes			
		Fire Test	As per API-607			
		Intergranular Corrosion Test	Not applicable			
		Inspection By	Third Party (Final Inspection)			
		Seat Leakage Rate	As per API-598 or ASME/FCI 70-2 CLASS V			

NOTES:

1 Vendor to give guarantee for satisfactory workmanship & operation of valve for 18 Months from the supply or 12 Months from operation, whichever is earlier.
2 Vendor to give the dimension & sectional drawing for valve & get it approved prior to manufacture.
3 Vendor to give 3 copies of Material T/C, Hydrostatic & Pneumatic Test Pressure T/C.
4 Vendor to offer ball valve with RPTFE soft-seat which can with stand given test pressure
5 Surface Protection- Prime Coat: Chlorine free with modified alkyd resin unobjectionable in physiological & toxicological respect. Additional External Coating : Silver Streak Aluminium Paint suitable for corrosive environment.

LEGENDS:

EO2 EXPORT OIL
HO HEAVY OIL
PL PROCESS LIQUID
PV PROCESS VAPOUR
WF1 WELL FLUID

			BALL VALVE SPECIFICATION			
DOC. NO. : EJB-2026-02-030-PIP-MDS-001				**CLIENT : SUN PETROCHEMICALS PVT LTD**		
PROJECT NO. : EJB-2026-02-030				**PROJECT : NEW CRUDE OIL PUMP HOUSE AT CPF**		
Class		B7A	**Size Range**	50 to 300 NB	**Design Standard**	API 608
Rating		300#	**Service**	EO2,HO,PL,PV,WF1	**Testing Standard**	API 598; API 607
End to End Dimension		ASME B16.10			**Design Conditions**	Pressure: 45 kg/cm² g
						Temperature: 120 °C
				Specification		**Vendor offer**
Construction		Type		Reduce Bore (2 piece), Bidirectional		
		Ends		Flanged, RF, 300#, as per ASME B16.5, 125-250 µinch AARH, conc. serration		
		Antistatic Device		Yes		
		Blowout-Proof Stem		Yes		
		Ball Mounting		Floating Ball (Trunnion mounted ≥ 150NB)		
		Cavity Filled Body Seat		Yes		
		Secondary Seat		Metal seat		
		Fire Safe		Yes		
		Operation		By lever/wrench (Gear Operated for size ≥ 150 NB)		
Material		Body		ASTM A 216 Gr. WCB		
		Stem		AISI 410/SS316		
		Ball		A105/SS316		
		Seat		RPTFE		
		Spring		Inconel		
		Gland Packing		Grafoil		
		Body Stud-Nuts		ASTM A 193 Gr. B7/ A 194 Gr. 2H		
		Lever/ Wrench		CS with PVC cover		
Tests		Pressure Test (Hydro)		Body: 72 bar (g) Seat: 53 bar (g)		
		Pneumatic Test (Seat)		6 bar (g)		
		Radiography		Yes		
		Fire Test		As per API-607		
		Intergranular Corrosion Test		Not applicable		
		Inspection By		Third Party (Final Inspection)		
		Seat Leakage Rate		As per API-598 or ASME/FCI 70-2 CLASS V		

NOTES:

1 Vendor to give guarantee for satisfactory workmanship & operation of valve for 18 Months from the supply or 12 Months from operation, whichever is earlier.

2 Vendor to give the dimension & sectional drawing for valve & get it approved prior to manufacture.

3 Vendor to give 3 copies of Material T/C, Hydrostatic & Pneumatic Test Pressure T/C.

4 Vendor to offer ball valve with RPTFE soft-seat which can with stand given test pressure

5 Surface Protection- Prime Coat: Chlorine free with modified alkyd resin unobjectionable in physiological & toxicological respect. Additional External Coating : Silver Streak Aluminium Paint suitable for corrosive environment.

LEGENDS:

EO2 EXPORT OIL
HO HEAVY OIL
PL PROCESS LIQUID
PV PROCESS VAPOUR
WF1 WELL FLUID

sun Petrochemicals	**GATE VALVE SPECIFICATION**	NAVITERA

DOC. NO. : EJB-2026-02-030-PIP-MDS-001	**CLIENT : SUN PETROCHEMICALS PVT LTD**
PROJECT NO. : EJB-2026-02-030	**PROJECT : NEW CRUDE OIL PUMP HOUSE AT CPF**

Class	B7A	**Size Range**	15 to 40 NB	**Design Standard**	API 602
Rating	800#	**Service**	EO2,HO,PL,PV,WF1	**Testing Standard**	API 598
End to End Dimension	Mnf. Std.			**Design Conditions**	Pressure: 45 kg/cm² g Temperature: 120 °C

		Specification	**Vendor offer**
Construction	Type	OS & Y	
	Ends	Socket weld, 3000# as per ASME B16.11	
	Bonnet	Bolted	
	Wedge	Solid	
	Body Seat Ring	Renewable	
	Back Seat	Integral	
	Bypass	-	
	Wedge Seat	Integral	
	Stem	Rising	
	Operation	Handwheel (Non-Rising)	
Material	Body & Bonnet	ASTM A 105	
	Stem	ASTM A276 TP410	
	Wedge	Stellited	
	Body Seat Ring	Stellited	
	Yoke/Yoke Bush	ASTM A 105/ A 439 Gr. D2C	
	Bonnet Gasket	Spiral wound SS316 + graphite	
	Bolts & Nuts	ASTM A 193 Gr. B7/ A 194 Gr. 2H	
	Gland Flange	ASTM A 105	
	Gland Packing	Pre-moulded Grafoil rings	
	Handwheel	Malleable iron or steel	
Tests	Pressure test (hydro)	Body: 205 bar (g) Seat: 150 bar (g)	
	Pneumatic test (seat)	6 bar (g)	
	Radiography	-	
	Intergranular corrosion test	Not applicable	
	Inspection by	Third Party (Final Inspection)	
	Seat leakage rate	As per API-598 or ASME/FCI 70-2 CLASS V	

NOTES:
1 Vendor to give guarantee for satisfactory workmanship & operation of valve for 18 Months from the supply or 12 Months from operation, whichever is earlier.
2 Vendor to give the dimension & sectional drawing for valve & get it approved prior to manufacture.
3 Vendor to give 3 copies of Material T/C, Hydrostatic & Pneumatic Test Pressure T/C.
4 Gland shall be suitable for re-packing under pressure when valve is fully open.
5 Surface Protection- Prime Coat: Chlorine free with modified alkyd resin unobjectionable in physiological & toxicological respect. Additional External Coating : Silver Streak Aluminium Paint suitable for corrosive environment.

LEGENDS:
EO2 EXPORT OIL
HO HEAVY OIL
PL PROCESS LIQUID
PV PROCESS VAPOUR
WF1 WELL FLUID

		GATE VALVE SPECIFICATION			
DOC. NO. : EJB-2026-02-030-PIP-MDS-001			**CLIENT : SUN PETROCHEMICALS PVT LTD**		
PROJECT NO. : EJB-2026-02-030			**PROJECT : NEW CRUDE OIL PUMP HOUSE AT CPF**		
Class	B7A	**Size Range**	15 to 40 NB	**Design Standard**	API 602
Rating	300#	**Service**	EO2,HO,PL,PV,WF1	**Testing Standard**	API 598
End to End Dimension	ASME B16.10			**Design Conditions**	Pressure: 45 kg/cm² g
					Temperature: 120 °C

		Specification	Vendor offer
Construction	Type	OS & Y	
	Ends	Flanged, RF, 300#, as per ASME B16.5, 125-250 µinch AARH, conc. serration	
	Bonnet	Bolted	
	Wedge	Solid	
	Body Seat Ring	Renewable	
	Back Seat	Integral	
	Bypass	-	
	Wedge Seat	Integral	
	Stem	Rising	
	Operation	Handwheel (Non-Rising)	
Material	Body & Bonnet	ASTM A 216 Gr. WCB	
	Stem	ASTM A276 TP410	
	Wedge	Stellited	
	Body Seat Ring	Stellited	
	Yoke/Yoke Bush	ASTM A 216 Gr. WCB/ A 439 Gr. D2C	
	Bonnet Gasket	Spiral wound SS316 + graphite	
	Bolts & Nuts	ASTM A 193 Gr. B7/ A 194 Gr. 2H	
	Gland Flange	ASTM A 105	
	Gland Packing	Pre-moulded Grafoil rings	
	Handwheel	Malleable iron or steel	
Tests	Pressure test (hydro)	Body: 72 bar (g) Seat: 53 bar (g)	
	Pneumatic test (seat)	6 bar (g)	
	Radiography	Yes	
	Intergranular corrosion test	Not applicable	
	Inspection by	Third Party (Final Inspection)	
	Seat leakage rate	As per API-598 or ASME/FCI 70-2 CLASS V	

NOTES:
1 Vendor to give guarantee for satisfactory workmanship & operation of valve for 18 Months from the supply or 12 Months from operation, whichever is earlier.
2 Vendor to give the dimension & sectional drawing for valve & get it approved prior to manufacture.
3 Vendor to give 3 copies of Material T/C, Hydrostatic & Pneumatic Test Pressure T/C.
4 Gland shall be suitable for re-packing under pressure when valve is fully open.
5 Surface Protection- Prime Coat: Chlorine free with modified alkyd resin unobjectionable in physiological & toxicological respect. Additional External Coating : Silver Streak Aluminium Paint suitable for corrosive environment.

LEGENDS:
EO2 EXPORT OIL
HO HEAVY OIL
PL PROCESS LIQUID
PV PROCESS VAPOUR
WF1 WELL FLUID

				GATE VALVE SPECIFICATION		
DOC. NO. : EJB-2026-02-030-PIP-MDS-001				**CLIENT : SUN PETROCHEMICALS PVT LTD**		
PROJECT NO. : EJB-2026-02-030				**PROJECT : NEW CRUDE OIL PUMP HOUSE AT CPF**		
Class		B7A	**Size Range**	50 to 300 NB	**Design Standard**	API 600
Rating		300#	**Service**	EO2,HO,PL,PV,WF1	**Testing Standard**	API 598
End to End Dimension		ASME B16.10			**Design Conditions**	Pressure: 45 kg/cm² g
						Temperature: 120 °C
				Specification		**Vendor offer**
Construction		Type		OS & Y		
		Ends		Flanged, RF, 300#, as per ASME B16.5, 125-250 µinch AARH, conc. serration		
		Bonnet		Bolted		
		Wedge		Flexible		
		Body Seat Ring		Renewable		
		Back Seat		Yes		
		Bypass		-		
		Wedge Seat		Integral		
		Stem		Rising		
		Operation		Handwheel (Gear operated for 250 NB & above)		
Material		Body & Bonnet		ASTM A 216 Gr. WCB		
		Stem		ASTM A276 TP410		
		Wedge		Stellited		
		Back Seat		ASTM A276 TP410		
		Body Seat Ring		Stellited		
		Yoke/Yoke Bush		ASTM A 216 Gr. WCB/ A 439 Gr. D2C		
		Bonnet Gasket		Spiral wound gasket, SS316 + Graphite		
		Bolts & Nuts		ASTM A 193 Gr. B7/ A 194 Gr. 2H		
		Gland Flange		ASTM A 105		
		Gland Packing		Grafoil		
		Handwheel		Malleable Iron or Steel		
Tests		Pressure test (hydro)		Body: 72 bar (g) Seat: 53 bar (g)		
		Pneumatic test (seat)		6 bar (g)		
		Radiography		Yes		
		Intergranular corrosion test		Not applicable		
		Inspection by		Third Party (Final Inspection)		
		Seat leakage rate		As per API-598 or ASME/FCI 70-2 CLASS V		

NOTES:

1 Vendor to give guarantee for satisfactory workmanship & operation of valve for 18 Months from the supply or 12 Months from operation, whichever is earlier.

2 Vendor to give the dimension & sectional drawing for valve & get it approved prior to manufacture.

3 Vendor to give 3 copies of Material T/C, Hydrostatic & Pneumatic Test Pressure T/C.

4 Gland shall be suitable for re-packing under pressure when valve is fully open.

5 Surface Protection- Prime Coat: Chlorine free with modified alkyd resin unobjectionable in physiological & toxicological respect. Additional External Coating : Silver Streak Aluminium Paint suitable for corrosive environment.

LEGENDS:

EO2 EXPORT OIL
HO HEAVY OIL
PL PROCESS LIQUID
PV PROCESS VAPOUR
WF1 WELL FLUID

			GLOBE VALVE SPECIFICATION			
DOC. NO. : EJB-2026-02-030-PIP-MDS-001				**CLIENT : SUN PETROCHEMICALS PVT LTD**		
PROJECT NO. : EJB-2026-02-030				**PROJECT : NEW CRUDE OIL PUMP HOUSE AT CPF**		
Class		B7A	**Size Range**	15 to 40 NB	**Design Standard**	BS 1873
Rating		800#	**Service**	EO2,HO,PL,PV,WF1	**Testing Standard**	API 598
End to End Dimension		MNF STD			**Design Conditions**	Pressure: 45 kg/cm² g
						Temperature: 120 °C
				Specification		**Vendor offer**
Construction		Type		OS & Y		
		Ends		Socket weld, 3000# as per ASME B16.11		
		Stem		Rising		
		Bonnet		Bolted		
		Disc		Loose Plug Type		
		Body Seat Ring		Renewable		
		Back Seat		Integral		
		Bypass		-		
		Type of Port		Standard Port		
		Operation		Hand Wheel (Non Rising)		
Material		Body & Bonnet		ASTM A 105		
		Stem		ASTM A276 TP410		
		Disc		Stellited		
		Body Seat Ring		Stellited		
		Yoke/Yoke Bush		ASTM A 105/ A 439 Gr. D2C		
		Bonnet Gasket		Spiral wound, SS316 + Graphite		
		Bolts & Nuts		ASTM A 193 Gr. B7 / A 194 Gr. 2H		
		Gland Flange		ASTM A 105		
		Gland Packing		Grafoil Rings		
		Hand Wheel		Malleable Iron or Steel		
Tests		Pressure test (hydro)		Body: 205 bar (g) Seat: 150 bar (g)		
		Pneumatic test (seat)		6 bar (g)		
		Radiography		-		
		Intergranular corrosion test		Not applicable		
		Inspection by		Third Party (Final Inspection)		
		Seat leakage rate		As per API-598 or ASME/FCI 70-2 CLASS V		

NOTES:

1 Vendor to give guarantee for satisfactory workmanship & operation of valve for 18 Months from the supply or 12 Months from operation, whichever is earlier.

2 Vendor to give the dimension & sectional drawing for valve & get it approved prior to manufacture.

3 Vendor to give 3 copies of Material T/C, Hydrostatic & Pneumatic Test Pressure T/C.

4 Gland shall be suitable for re-packing under pressure when valve is fully open.

5 Surface Protection- Prime Coat: Chlorine free with modified alkyd resin unobjectionable in physiological & toxicological respect. Additional External Coating : Silver Streak Aluminium Paint suitable for corrosive environment.

LEGENDS:

EO2 EXPORT OIL
HO HEAVY OIL
PL PROCESS LIQUID
PV PROCESS VAPOUR
WF1 WELL FLUID

			GLOBE VALVE SPECIFICATION			
DOC. NO. : EJB-2026-02-030-PIP-MDS-001				**CLIENT : SUN PETROCHEMICALS PVT LTD**		
PROJECT NO. : EJB-2026-02-030				**PROJECT : NEW CRUDE OIL PUMP HOUSE AT CPF**		
Class		B7A	**Size Range**	50 to 300 NB	**Design Standard**	BS 1873
Rating		300#	**Service**	EO2,HO,PL,PV,WF1	**Testing Standard**	API 598
End to End Dimension		ASME B16.10			**Design Conditions**	Pressure: 45 kg/cm² g
						Temperature: 120 °C
				Specification		**Vendor offer**
Construction		Type		OS & Y		
		Ends		Flanged, RF, 300#, as per ASME B16.5, 125-250 µinch AARH, conc. serration		
		Stem		Rising		
		Bonnet		Bolted		
		Disc		Plug-type		
		Body Seat Ring		Renewable		
		Back Seat		Yes		
		Bypass		-		
		Disc Seat		Integral		
		Operation		Handwheel (Gear operated for 300 NB)		
Material		Body & Bonnet		ASTM A 216 Gr. WCB		
		Stem		ASTM A276 TP410		
		Disc		Stellited		
		Back Seat & Shoulder		ASTM A276 TP410		
		Body Seat Ring		Stellited		
		Yoke/Yoke Bush		ASTM A 216 Gr. WCB/ A 439 Gr. D2C		
		Bonnet Gasket		Spiral wound gasket, SS316 + graphite		
		Bolts & Nuts		ASTM A 193 Gr. B7/ A 194 Gr. 2H		
		Gland Flange		ASTM A 105		
		Gland Packing		Grafoil		
		Handwheel		Malleable Iron or Steel		
Tests		Pressure test (hydro)		Body: 72 bar (g) Seat: 53 bar (g)		
		Pneumatic test (seat)		6 bar (g)		
		Radiography		Yes		
		Intergranular corrosion test		Not applicable		
		Inspection by		Third Party (Final Inspection)		
		Seat leakage rate		As per API-598 or ASME/FCI 70-2 CLASS V		

NOTES:

1 Vendor to give guarantee for satisfactory workmanship & operation of valve for 18 Months from the supply or 12 Months from operation, whichever is earlier.

2 Vendor to give the dimension & sectional drawing for valve & get it approved prior to manufacture.

3 Vendor to give 3 copies of Material T/C, Hydrostatic & Pneumatic Test Pressure T/C.

4 Gland shall be suitable for re-packing under pressure when valve is fully open.

5 Surface Protection- Prime Coat: Chlorine free with modified alkyd resin unobjectionable in physiological & toxicological respect. Additional External Coating : Silver Streak Aluminium Paint suitable for corrosive environment.

LEGENDS:

EO2 EXPORT OIL
HO HEAVY OIL
PL PROCESS LIQUID
PV PROCESS VAPOUR
WF1 WELL FLUID

		CHECK VALVE SPECIFICATION			
DOC. NO. : EJB-2026-02-030-PIP-MDS-001			**CLIENT : SUN PETROCHEMICALS PVT LTD**		
PROJECT NO. : EJB-2026-02-030			**PROJECT : NEW CRUDE OIL PUMP HOUSE AT CPF**		
Class	B7A	**Size Range**	15 to 40 NB	**Design Standard**	BS 5352
Rating	300#	**Service**	EO2,HO,PL,PV,WF1	**Testing Standard**	API 598
End to End Dimension	MNF STD			**Design Conditions**	Pressure: 45 kg/cm² g
					Temperature: 120 °C

		Specification	**Vendor offer**
Construction	Type	Lift type (suitable for vertical & horizontal installation	
	Ends	Socket-weld, 3000# as per ASME B16.11	
	Cover	Bolted	
	Piston/ Ball	Spring-loaded	
	Seat Ring	Renewable	
	Port	Standard	
Material	Body	ASTM A105	
	Cover	ASTM A105	
	Piston/ Ball	Stellited	
	Seat Ring	Stellited	
	Spring	SS316	
	Gasket	Spiral wound, SS316 + Graphite	
	Bolts & Nuts	ASTM A 193 Gr. B7/ A 194 Gr. 2H	
Tests	Pressure Test (Hydro)	Body: 205 bar (g) Seat: 150 bar (g)	
	Pneumatic Test (Seat)	6 bar (g)	
	Radiography	Yes	
	Intergranular Corrosion Test	Not applicable	
	Inspection By	Third Party (Final Inspection)	
	Seat Leakage Rate	As per API-598 or ASME/FCI 70-2 Class V	

NOTES:

1 Vendor to give guarantee for satisfactory workmanship & operation of valve for 18 Months from the supply or 12 Months from operation, whichever is earlier.

2 Vendor to give the dimension & sectional drawing for valve & get it approved prior to manufacture.

3 Vendor to give 3 copies of Material T/C, Hydrostatic & Pneumatic Test Pressure T/C.

4 Surface Protection- Prime Coat: Chlorine free with modified alkyd resin unobjectionable in physiological & toxicological respect. Additional External Coating : Silver Streak Aluminium Paint suitable for corrosive environment.

LEGENDS:

EO2 EXPORT OIL
HO HEAVY OIL
PL PROCESS LIQUID
PV PROCESS VAPOUR
WF1 WELL FLUID

		CHECK VALVE SPECIFICATION			
DOC. NO. : EJB-2026-02-030-PIP-MDS-001			**CLIENT : SUN PETROCHEMICALS PVT LTD**		
PROJECT NO. : EJB-2026-02-030			**PROJECT : NEW CRUDE OIL PUMP HOUSE AT CPF**		
Class	B7A	**Size Range**	50 to 300 NB	**Design Standard**	API 594
Rating	300#	**Service**	EO2,HO,PL,PV,WF1	**Testing Standard**	API 598
End to End Dimension	ASME B16.10			**Design Conditions**	Pressure: 45 kg/cm² g
					Temperature: 120 °C

		Specification	**Vendor offer**
Construction	Type	Swing Disc Check	
	Ends	Flanged, RF, 300#, as per ASME B16.5, 125-250 µinch AARH, conc. serration	
	Cover	Bolted	
	Disc	Solid	
	Body Seat	Renewable	
	Disc Seat	Renewable	
Material	Body	ASTM A 216 Gr. WCB	
	Cover	ASTM A 216 Gr. WCB	
	Disc	ASTM A 216 Gr. WCB + 13% CR FACING	
	Disc Facing	13% Cr Steel	
	Seat Ring	13% Cr Steel	
	Disc Hinge	13% Cr Steel	
	Hinge Pin	AISI 410	
	Gasket	Spiral wound, SS316 + Graphite	
	Bolts & Nuts	ASTM A 193 Gr. B7/ A 194 Gr. 2H	
Tests	Pressure test (hydro)	Body: 72 bar (g) Seat: 53 bar (g)	
	Pneumatic test (seat)	6 bar (g)	
	Radiography	Yes	
	Intergranular corrosion test	Not applicable	
	Inspection by	Third Party (Final Inspection)	
	Seat leakage rate	As per API-598 or ASME/FCI 70-2 CLASS V	

NOTES:

1 Vendor to give guarantee for satisfactory workmanship & operation of valve for 18 Months from the supply or 12 Months from operation, whichever is earlier.

2 Vendor to give the dimension & sectional drawing for valve & get it approved prior to manufacture.

3 Vendor to give 3 copies of Material T/C, Hydrostatic & Pneumatic Test Pressure T/C.

4 Surface Protection- Prime Coat: Chlorine free with modified alkyd resin unobjectionable in physiological & toxicological respect. Additional External Coating : Silver Streak Aluminium Paint suitable for corrosive environment.

LEGENDS:

EO2 EXPORT OIL
HO HEAVY OIL
PL PROCESS LIQUID
PV PROCESS VAPOUR
WF1 WELL FLUID

VALVE MATERIAL SPECIFICATION
D7A

CONTENTS:-

Sr. No.	Description
1	Cover Sheet
2	Specification for Ball Valve (Reduce Bore/Full Bore), 15-40 NB
3	Specification for Ball Valve (Reduce Bore/Full Bore), 50-300 NB
4	Specification for Gate Valve, 15-40 NB, Socket Weld
5	Specification for Gate Valve, 15-40 NB
6	Specification for Gate Valve, 50-300 NB
7	Specification for Globe Valve, 15-40 NB, Socket Weld
8	Specification for Globe Valve, 15-300 NB
9	Specification for Check Valve, 15-40 NB
10	Specification for Check Valve, 50-300 NB

			Pankaj S	RBP	VJS
0	08.10.26	ISSUED FOR ENGINEERING	PC	RBP	VJS
REV	**DATE**	**PURPOSE**	**BY**	**CHK.**	**APPR.**

			BALL VALVE SPECIFICATION			
DOC. NO. : EJB-2026-02-030-PIP-MDS-001				**CLIENT : SUN PETROCHEMICALS PVT LTD**		
PROJECT NO. : EJB-2026-02-030				**PROJECT : NEW CRUDE OIL PUMP HOUSE AT CPF**		
Class		D7A	**Size Range**	15 to 40 NB	**Design Standard**	ISO 17292
Rating		600#	**Service**	Process Liquid	**Testing Standard**	API 598; API 607
End to End Dimension		ASME B16.10			**Design Conditions**	Pressure: 65 kg/cm² g
						Temperature: 80 °C
				Specification		**Vendor offer**
Construction		Type		Reduce Bore (2 piece), Bidirectional		
		Ends		Flanged, RF, 600#, as per ASME B16.5, 125-250 µinch AARH, conc. serration		
		Antistatic Device		Yes		
		Blowout-Proof Stem		Yes		
		Ball Mounting		Floating ball		
		Cavity Filled Body Seat		Yes		
		Secondary Seat		Metal seat		
		Fire Safe		Yes		
		Operation		By lever/wrench (Gear Operated for size ≥ 150 NB)		
Material		Body		ASTM A 216 Gr. WCB/A 105		
		Stem		SS316		
		Ball		SS316		
		Seat		RPTFE		
		Gland		SS316		
		Gland Packing		Grafoil		
		Body Stud-Nuts		ASTM A 193 Gr. B7/ A 194 Gr. 2H		
		Lever/ Wrench		CS with PVC cover		
Tests		Pressure Test (Hydro)		Body: 154 bar (g) Seat: 113 bar (g)		
		Pneumatic Test (Seat)		6 bar (g)		
		Radiography		Yes		
		Fire Test		As per API-607		
		Intergranular Corrosion Test		Not applicable		
		Inspection By		Third Party (Final Inspection)		
		Seat Leakage Rate		As per API-598 or ASME/FCI 70-2 CLASS V		

NOTES:

1 Vendor to give guarantee for satisfactory workmanship & operation of valve for 18 Months from the supply or 12 Months from operation, whichever is earlier.

2 Vendor to give the dimension & sectional drawing for valve & get it approved prior to manufacture.

3 Vendor to give 3 copies of Material T/C, Hydrostatic & Pneumatic Test Pressure T/C.

4 Vendor to offer ball valve with RPTFE soft-seat which can with stand given test pressure

5 Surface Protection- Prime Coat: Chlorine free with modified alkyd resin unobjectionable in physiological & toxicological respect. Additional External Coating : Silver Streak Aluminium Paint suitable for corrosive environment.

		BALL VALVE SPECIFICATION			
DOC. NO. : EJB-2026-02-030-PIP-MDS-001			**CLIENT : SUN PETROCHEMICALS PVT LTD**		
PROJECT NO. : EJB-2026-02-030			**PROJECT : NEW CRUDE OIL PUMP HOUSE AT CPF**		
Class	D7A	**Size Range**	15 to 40 NB	**Design Standard**	ISO 17292
Rating	600#	**Service**	Process Liquid	**Testing Standard**	API 598; API 607
End to End Dimension	ASME B16.10			**Design Conditions**	Pressure: 65 kg/cm² g
					Temperature: 80 °C

		Specification	**Vendor offer**
Construction	Type	Full Bore (2 piece), Bidirectional	
	Ends	Flanged, RF, 600#, as per ASME B16.5, 125-250 µinch AARH, conc. serration	
	Antistatic Device	Yes	
	Blowout-Proof Stem	Yes	
	Ball Mounting	Floating ball	
	Cavity Filled Body Seat	Yes	
	Secondary Seat	Metal seat	
	Fire Safe	Yes	
	Operation	By lever/wrench (Gear Operated for size ≥ 150 NB)	
Material	Body	ASTM A 216 Gr. WCB/A 105	
	Stem	SS316	
	Ball	SS316	
	Seat	RPTFE	
	Gland	SS316	
	Gland Packing	Grafoil	
	Body Stud-Nuts	ASTM A 193 Gr. B7/ A 194 Gr. 2H	
	Lever/ Wrench	CS with PVC cover	
Tests	Pressure Test (Hydro)	Body: 154 bar (g) Seat: 113 bar (g)	
	Pneumatic Test (Seat)	6 bar (g)	
	Radiography	Yes	
	Fire Test	As per API-607	
	Intergranular Corrosion Test	Not applicable	
	Inspection By	Third Party (Final Inspection)	
	Seat Leakage Rate	As per API-598 or ASME/FCI 70-2 CLASS V	

NOTES:

1 Vendor to give guarantee for satisfactory workmanship & operation of valve for 18 Months from the supply or 12 Months from operation, whichever is earlier.

2 Vendor to give the dimension & sectional drawing for valve & get it approved prior to manufacture.

3 Vendor to give 3 copies of Material T/C, Hydrostatic & Pneumatic Test Pressure T/C.

4 Vendor to offer ball valve with RPTFE soft-seat which can with stand given test pressure

5 Surface Protection- Prime Coat: Chlorine free with modified alkyd resin unobjectionable in physiological & toxicological respect. Additional External Coating : Silver Streak Aluminium Paint suitable for corrosive environment.

			BALL VALVE SPECIFICATION			
DOC. NO. : EJB-2026-02-030-PIP-MDS-001				**CLIENT : SUN PETROCHEMICALS PVT LTD**		
PROJECT NO. : EJB-2026-02-030				**PROJECT : NEW CRUDE OIL PUMP HOUSE AT CPF**		
Class		D7A	**Size Range**	50 to 300 NB	**Design Standard**	API 608
Rating		600#	**Service**	Process Liquid	**Testing Standard**	API 598; API 607
End to End Dimension		ASME B16.10			**Design Conditions**	Pressure: 65 kg/cm² g
						Temperature: 80 °C
				Specification		**Vendor offer**
Construction		Type		Full Bore (2 piece), Bidirectional		
		Ends		Flanged, RF, 600#, as per ASME B16.5, 125-250 µinch AARH, conc. serration		
		Antistatic Device		Yes		
		Blowout-Proof Stem		Yes		
		Ball Mounting		Trunnion mounted		
		Cavity Filled Body Seat		Yes		
		Secondary Seat		Metal seat		
		Fire Safe		Yes		
		Operation		By lever/wrench (Gear Operated for size ≥ 150 NB)		
Material		Body		ASTM A 216 Gr. WCB		
		Stem		AISI 410		
		Ball		ASTM A182 GR F6A CL2		
		Seat		RPTFE/DEVLON		
		Spring		Inconel		
		Gland Packing		Grafoil		
		Body Stud-Nuts		ASTM A 193 Gr. B7/ A 194 Gr. 2H		
		Lever/ Wrench		CS with PVC cover		
Tests		Pressure Test (Hydro)		Body: 154 bar (g) Seat: 113 bar (g)		
		Pneumatic Test (Seat)		6 bar (g)		
		Radiography		Yes		
		Fire Test		As per API-607		
		Intergranular Corrosion Test		Not applicable		
		Inspection By		Third Party (Final Inspection)		
		Seat Leakage Rate		As per API-598 or ASME/FCI 70-2 CLASS V		

NOTES:

1 Vendor to give guarantee for satisfactory workmanship & operation of valve for 18 Months from the supply or 12 Months from operation, whichever is earlier.

2 Vendor to give the dimension & sectional drawing for valve & get it approved prior to manufacture.

3 Vendor to give 3 copies of Material T/C, Hydrostatic & Pneumatic Test Pressure T/C.

4 Vendor to offer ball valve with RPTFE soft-seat which can with stand given test pressure

5 Surface Protection- Prime Coat: Chlorine free with modified alkyd resin unobjectionable in physiological & toxicological respect. Additional External Coating : Silver Streak Aluminium Paint suitable for corrosive environment.

			BALL VALVE SPECIFICATION			
DOC. NO. : EJB-2026-02-030-PIP-MDS-001				**CLIENT : SUN PETROCHEMICALS PVT LTD**		
PROJECT NO. : EJB-2026-02-030				**PROJECT : NEW CRUDE OIL PUMP HOUSE AT CPF**		
Class		D7A	**Size Range**	50 to 300 NB	**Design Standard**	API 608
Rating		600#	**Service**	Process Liquid	**Testing Standard**	API 598; API 607
End to End Dimension		ASME B16.10			**Design Conditions**	Pressure: 65 kg/cm² g
						Temperature: 80 °C
				Specification		**Vendor offer**
Construction		Type		Reduce Bore (2 piece), Bidirectional		
		Ends		Flanged, RF, 600#, as per ASME B16.5, 125-250 µinch AARH, conc. serration		
		Antistatic Device		Yes		
		Blowout-Proof Stem		Yes		
		Ball Mounting		Trunnion mounted		
		Cavity Filled Body Seat		Yes		
		Secondary Seat		Metal seat		
		Fire Safe		Yes		
		Operation		By lever/wrench (Gear Operated for size ≥ 150 NB)		
Material		Body		ASTM A 216 Gr. WCB		
		Stem		AISI 410		
		Ball		ASTM A182 GR F6A CL2		
		Seat		RPTFE/DEVLON		
		Spring		Inconel		
		Gland Packing		Grafoil		
		Body Stud-Nuts		ASTM A 193 Gr. B7/ A 194 Gr. 2H		
		Lever/ Wrench		CS with PVC cover		
Tests		Pressure Test (Hydro)		Body: 154 bar (g) Seat: 113 bar (g)		
		Pneumatic Test (Seat)		6 bar (g)		
		Radiography		Yes		
		Fire Test		As per API-607		
		Intergranular Corrosion Test		Not applicable		
		Inspection By		Third Party (Final Inspection)		
		Seat Leakage Rate		As per API-598 or ASME/FCI 70-2 CLASS V		

NOTES:

1 Vendor to give guarantee for satisfactory workmanship & operation of valve for 18 Months from the supply or 12 Months from operation, whichever is earlier.

2 Vendor to give the dimension & sectional drawing for valve & get it approved prior to manufacture.

3 Vendor to give 3 copies of Material T/C, Hydrostatic & Pneumatic Test Pressure T/C.

4 Vendor to offer ball valve with RPTFE soft-seat which can with stand given test pressure

5 Surface Protection- Prime Coat: Chlorine free with modified alkyd resin unobjectionable in physiological & toxicological respect. Additional External Coating : Silver Streak Aluminium Paint suitable for corrosive environment.

		GATE VALVE SPECIFICATION			
DOC. NO. : EJB-2026-02-030-PIP-MDS-001			**CLIENT : SUN PETROCHEMICALS PVT LTD**		
PROJECT NO. : EJB-2026-02-030			**PROJECT : NEW CRUDE OIL PUMP HOUSE AT CPF**		
Class	D7A	**Size Range**	15 to 40 NB	**Design Standard**	API 602
Rating	800#	**Service**	Process Liquid	**Testing Standard**	API 598
End to End Dimension	Mnf. Std.			**Design Conditions**	Pressure: 65 kg/cm² g
					Temperature: 80 °C

		Specification	Vendor offer
Construction	Type	OS & Y	
	Ends	Socket weld, 3000# as per ASME B16.11	
	Bonnet	Bolted	
	Wedge	Solid	
	Body Seat Ring	Renewable	
	Back Seat	Integral	
	Bypass	-	
	Wedge Seat	Integral	
	Stem	Rising	
	Operation	Handwheel (Non-Rising)	
Material	Body & Bonnet	ASTM A 105	
	Stem	13% Cr Steel (No Casting)	
	Wedge	Stellited	
	Body Seat Ring	Stellited	
	Yoke/Yoke Bush	ASTM A 105/ A 439 Gr. D2C	
	Bonnet Gasket	Spiral wound SS316 + graphite	
	Bolts & Nuts	ASTM A 193 Gr. B7/ A 194 Gr. 2H	
	Gland Flange	ASTM A 105	
	Gland Packing	Pre-moulded Grafoil rings	
	Handwheel	Malleable iron or steel	
Tests	Pressure test (hydro)	Body: 205 bar (g) Seat: 150 bar (g)	
	Pneumatic test (seat)	6 bar (g)	
	Radiography	-	
	Intergranular corrosion test	Not applicable	
	Inspection by	Third Party (Final Inspection)	
	Seat leakage rate	As per API-598 or ASME/FCI 70-2 CLASS V	

NOTES:

1 Vendor to give guarantee for satisfactory workmanship & operation of valve for 18 Months from the supply or 12 Months from operation, whichever is earlier.

2 Vendor to give the dimension & sectional drawing for valve & get it approved prior to manufacture.

3 Vendor to give 3 copies of Material T/C, Hydrostatic & Pneumatic Test Pressure T/C.

4 Gland shall be suitable for re-packing under pressure when valve is fully open.

5 Surface Protection- Prime Coat: Chlorine free with modified alkyd resin unobjectionable in

				GATE VALVE SPECIFICATION		
DOC. NO. : EJB-2026-02-030-PIP-MDS-001				**CLIENT : SUN PETROCHEMICALS PVT LTD**		
PROJECT NO. : EJB-2026-02-030				**PROJECT : NEW CRUDE OIL PUMP HOUSE AT CPF**		
Class		D7A	**Size Range**	15 to 40 NB	**Design Standard**	API 602
Rating		600#	**Service**	Process Liquid	**Testing Standard**	API 598
End to End Dimension		ASME B16.10			**Design Conditions**	Pressure: 65 kg/cm² g
						Temperature: 80 °C
				Specification		**Vendor offer**
Construction		Type		OS & Y		
		Ends		Flanged, RF, 600#, as per ASME B16.5, 125-250 µinch AARH, conc. serration		
		Bonnet		Bolted		
		Wedge		Solid		
		Body Seat Ring		Renewable		
		Back Seat		Integral		
		Bypass		-		
		Wedge Seat		Integral		
		Stem		Rising		
		Operation		Handwheel (Non-Rising)		
Material		Body & Bonnet		ASTM A 216 Gr. WCB		
		Stem		13% Cr Steel (No Casting)		
		Wedge		Stellited		
		Body Seat Ring		Stellited		
		Yoke/Yoke Bush		ASTM A 216 Gr. WCB/ A 439 Gr. D2C		
		Bonnet Gasket		Spiral wound SS316 + graphite		
		Bolts & Nuts		ASTM A 193 Gr. B7/ A 194 Gr. 2H		
		Gland Flange		ASTM A 105		
		Gland Packing		Pre-moulded Grafoil rings		
		Handwheel		Malleable iron or steel		
Tests		Pressure test (hydro)		Body: 154 bar (g) Seat: 113 bar (g)		
		Pneumatic test (seat)		6 bar (g)		
		Radiography		Yes		
		Intergranular corrosion test		Not applicable		
		Inspection by		Third Party (Final Inspection)		
		Seat leakage rate		As per API-598 or ASME/FCI 70-2 CLASS V		

NOTES:

1 Vendor to give guarantee for satisfactory workmanship & operation of valve for 18 Months from the supply or 12 Months from operation, whichever is earlier.

2 Vendor to give the dimension & sectional drawing for valve & get it approved prior to manufacture.

3 Vendor to give 3 copies of Material T/C, Hydrostatic & Pneumatic Test Pressure T/C.

4 Gland shall be suitable for re-packing under pressure when valve is fully open.

5 Surface Protection- Prime Coat: Chlorine free with modified alkyd resin unobjectionable in

sun Petrochemicals			GATE VALVE SPECIFICATION		NAVITERA
DOC. NO. : EJB-2026-02-030-PIP-MDS-001			CLIENT : SUN PETROCHEMICALS PVT LTD		
PROJECT NO. : EJB-2026-02-030			PROJECT : NEW CRUDE OIL PUMP HOUSE AT CPF		
Class	D7A	**Size Range**	50 to 300 NB	**Design Standard**	API 600
Rating	600#	**Service**	Process Liquid	**Testing Standard**	API 598
End to End Dimension	ASME B16.10			**Design Conditions**	Pressure: 65 kg/cm² g Temperature: 80 °C

		Specification	Vendor offer
Construction	Type	OS & Y	
	Ends	Flanged, RF, 600#, as per ASME B16.5, 125-250 µinch AARH, conc. serration	
	Bonnet	Bolted	
	Wedge	Flexible	
	Body Seat Ring	Renewable	
	Back Seat	Yes	
	Bypass	-	
	Wedge Seat	Integral	
	Stem	Rising	
	Operation	Handwheel (Gear operated for 250 NB & above)	
Material	Body & Bonnet	ASTM A 216 Gr. WCB	
	Stem	13% Cr Steel (No Casting)	
	Wedge	13% Cr Steel	
	Back Seat	13% Cr Steel	
	Body Seat Ring	13% Cr Steel	
	Yoke/Yoke Bush	ASTM A 216 Gr. WCB/ A 439 Gr. D2C	
	Bonnet Gasket	Spiral wound gasket, SS316 + Graphite	
	Bolts & Nuts	ASTM A 193 Gr. B7/ A 194 Gr. 2H	
	Gland Flange	ASTM A 105	
	Gland Packing	Grafoil	
	Handwheel	Malleable Iron or Steel	
Tests	Pressure test (hydro)	Body: 154 bar (g) Seat: 113 bar (g)	
	Pneumatic test (seat)	6 bar (g)	
	Radiography	Yes	
	Intergranular corrosion test	Not applicable	
	Inspection by	Third Party (Final Inspection)	
	Seat leakage rate	As per API-598 or ASME/FCI 70-2 CLASS V	

NOTES:

1 Vendor to give guarantee for satisfactory workmanship & operation of valve for 18 Months from the supply or 12 Months from operation, whichever is earlier.

2 Vendor to give the dimension & sectional drawing for valve & get it approved prior to manufacture.

3 Vendor to give 3 copies of Material T/C, Hydrostatic & Pneumatic Test Pressure T/C.

4 Gland shall be suitable for re-packing under pressure when valve is fully open.

suitable for corrosive environment.

				GLOBE VALVE SPECIFICATION		
DOC. NO. : EJB-2026-02-030-PIP-MDS-001				**CLIENT : SUN PETROCHEMICALS PVT LTD**		
PROJECT NO. : EJB-2026-02-030				**PROJECT : NEW CRUDE OIL PUMP HOUSE AT CPF**		
Class		D7A	**Size Range**	15 to 40 NB	**Design Standard**	BS 1873
Rating		800#	**Service**	Process Liquid	**Testing Standard**	API 598
End to End Dimension		MNF STD			**Design Conditions**	Pressure: 65 kg/cm² g
						Temperature: 80 °C
				Specification		**Vendor offer**
Construction		Type		OS & Y		
		Ends		Socket weld, 3000# as per ASME B16.11		
		Stem		Rising		
		Bonnet		Bolted		
		Disc		Loose Plug Type		
		Body Seat Ring		Renewable		
		Back Seat		Integral		
		Bypass		-		
		Type of Port		Standard Port		
		Operation		Hand Wheel (Non Rising)		
Material		Body & Bonnet		ASTM A 105		
		Stem		13% Cr Steel (No Casting)		
		Disc		Stellited		
		Body Seat Ring		Stellited		
		Yoke/Yoke Bush		ASTM A 105/ A 439 Gr. D2C		
		Bonnet Gasket		Spiral wound, SS316 + Graphite		
		Bolts & Nuts		ASTM A 193 Gr. B7 / A 194 Gr. 2H		
		Gland Flange		ASTM A 105		
		Gland Packing		Grafoil Rings		
		Hand Wheel		Malleable Iron or Steel		
Tests		Pressure test (hydro)		Body: 205 bar (g) Seat: 150 bar (g)		
		Pneumatic test (seat)		6 bar (g)		
		Radiography		-		
		Intergranular corrosion test		Not applicable		
		Inspection by		Third Party (Final Inspection)		
		Seat leakage rate		As per API-598 or ASME/FCI 70-2 CLASS V		

NOTES:

1 Vendor to give guarantee for satisfactory workmanship & operation of valve for 18 Months from the supply or 12 Months from operation, whichever is earlier.

2 Vendor to give the dimension & sectional drawing for valve & get it approved prior to manufacture.

3 Vendor to give 3 copies of Material T/C, Hydrostatic & Pneumatic Test Pressure T/C.

4 Gland shall be suitable for re-packing under pressure when valve is fully open.

suitable for corrosive environment.

		GLOBE VALVE SPECIFICATION			
DOC. NO. : EJB-2026-02-030-PIP-MDS-001			**CLIENT : SUN PETROCHEMICALS PVT LTD**		
PROJECT NO. : EJB-2026-02-030			**PROJECT : NEW CRUDE OIL PUMP HOUSE AT CPF**		
Class	D7A	**Size Range**	50 to 300 NB	**Design Standard**	BS 1873
Rating	600#	**Service**	Process Liquid	**Testing Standard**	API 598
End to End Dimension	ASME B16.10			**Design Conditions**	Pressure: 65 kg/cm² g
					Temperature: 80 °C

		Specification	**Vendor offer**
Construction	Type	OS & Y	
	Ends	Flanged, RF, 600#, as per ASME B16.5, 125-250 µinch AARH, conc. serration	
	Stem	Rising	
	Bonnet	Bolted	
	Disc	Plug-type	
	Body Seat Ring	Renewable	
	Back Seat	Yes	
	Bypass	-	
	Disc Seat	Integral	
	Operation	Handwheel (Gear operated for 300 NB)	
Material	Body & Bonnet	ASTM A 216 Gr. WCB	
	Stem	AISI 410	
	Disc	Stellited	
	Back Seat & Shoulder	13% Cr Steel/AISI 410	
	Body Seat Ring	Stellited	
	Yoke/Yoke Bush	ASTM A 216 Gr. WCB/ A 439 Gr. D2C	
	Bonnet Gasket	Spiral wound gasket, SS316 + graphite	
	Bolts & Nuts	ASTM A 193 Gr. B7/ A 194 Gr. 2H	
	Gland Flange	ASTM A 105	
	Gland Packing	Grafoil	
	Handwheel	Malleable Iron or Steel	
Tests	Pressure test (hydro)	Body: 154 bar (g) Seat: 113 bar (g)	
	Pneumatic test (seat)	6 bar (g)	
	Radiography	Yes	
	Intergranular corrosion test	Not applicable	
	Inspection by	Third Party (Final Inspection)	
	Seat leakage rate	As per API-598 or ASME/FCI 70-2 CLASS V	

NOTES:

1 Vendor to give guarantee for satisfactory workmanship & operation of valve for 18 Months from the supply or 12 Months from operation, whichever is earlier.

2 Vendor to give the dimension & sectional drawing for valve & get it approved prior to manufacture.

3 Vendor to give 3 copies of Material T/C, Hydrostatic & Pneumatic Test Pressure T/C.

4 Gland shall be suitable for re-packing under pressure when valve is fully open.

suitable for corrosive environment.

			CHECK VALVE SPECIFICATION		
DOC. NO. : EJB-2026-02-030-PIP-MDS-001			**CLIENT : SUN PETROCHEMICALS PVT LTD**		
PROJECT NO. : EJB-2026-02-030			**PROJECT : NEW CRUDE OIL PUMP HOUSE AT CPF**		
Class	D7A	**Size Range**	15 to 40 NB	**Design Standard**	BS 5352
Rating	600#	**Service**	Process Liquid	**Testing Standard**	API 598
End to End Dimension	ISO 5752			**Design Conditions**	Pressure: 65 kg/cm² g
					Temperature: 80 °C

		Specification	**Vendor offer**
Construction	Type	Lift type (suitable for vertical & horizontal installation	
	Ends	Socket-weld, 3000# as per ASME B16.11	
	Cover	Bolted	
	Piston/ Ball	Spring-loaded	
	Seat Ring	Renewable	
	Port	Standard	
	Body	ASTM A105	
	Cover	ASTM A105	
	Piston/ Ball	Stellited	
	Seat Ring	Stellited	
	Spring	SS316	
	Gasket	Spiral wound, SS316 + Graphite	
	Bolts & Nuts	ASTM A 193 Gr. B7/ A 194 Gr. 2H	
Tests	Pressure Test (Hydro)	Body: 154 bar (g) Seat: 113 bar (g)	
	Pneumatic Test (Seat)	6 bar (g)	
	Radiography	Yes	
	Intergranular Corrosion Test	Not applicable	
	Inspection By	Third Party (Final Inspection)	
	Seat Leakage Rate	As per API-598 or ASME/FCI 70-2 Class V	

NOTES:

1 Vendor to give guarantee for satisfactory workmanship & operation of valve for 18 Months from the supply or 12 Months from operation, whichever is earlier.

2 Vendor to give the dimension & sectional drawing for valve & get it approved prior to manufacture.

3 Vendor to give 3 copies of Material T/C, Hydrostatic & Pneumatic Test Pressure T/C.

4 Surface Protection- Prime Coat: Chlorine free with modified alkyd resin unobjectionable in physiological & toxicological respect. Additional External Coating : Silver Streak Aluminium Paint suitable for corrosive environment.

		CHECK VALVE SPECIFICATION			
DOC. NO. : EJB-2026-02-030-PIP-MDS-001			**CLIENT : SUN PETROCHEMICALS PVT LTD**		
PROJECT NO. : EJB-2026-02-030			**PROJECT : NEW CRUDE OIL PUMP HOUSE AT CPF**		
Class	D7A	**Size Range**	50 to 300 NB	**Design Standard**	API 594
Rating	600#	**Service**	Process Liquid	**Testing Standard**	API 598
End to End Dimension	ASME B16.10			**Design Conditions**	Pressure: 65 kg/cm² g
					Temperature: 80 °C

		Specification	**Vendor offer**
Construction	Type	Swing Disc Check	
	Ends	Flanged, RF, 600#, as per ASME B16.5, 125-250 µinch AARH, conc. serration	
	Cover	Bolted	
	Disc	Solid	
	Body Seat	Renewable	
	Disc Seat	Renewable	
Material	Body	ASTM A 216 Gr. WCB	
	Cover	ASTM A 216 Gr. WCB	
	Disc	ASTM A 216 Gr. WCB + 13% CR FACING	
	Disc Facing	13% Cr Steel	
	Seat Ring	13% Cr Steel	
	Disc Hinge	13% Cr Steel	
	Hinge Pin	AISI 410	
	Gasket	Spiral wound, SS316 + Graphite	
	Bolts & Nuts	ASTM A 193 Gr. B7/ A 194 Gr. 2H	
Tests	Pressure test (hydro)	Body: 154 bar (g) Seat: 113 bar (g)	
	Pneumatic test (seat)	6 bar (g)	
	Radiography	Yes	
	Intergranular corrosion test	Not applicable	
	Inspection by	Third Party (Final Inspection)	
	Seat leakage rate	As per API-598 or ASME/FCI 70-2 CLASS V	

NOTES:

1 Vendor to give guarantee for satisfactory workmanship & operation of valve for 18 Months from the supply or 12 Months from operation, whichever is earlier.

2 Vendor to give the dimension & sectional drawing for valve & get it approved prior to manufacture.

3 Vendor to give 3 copies of Material T/C, Hydrostatic & Pneumatic Test Pressure T/C.

4 Surface Protection- Prime Coat: Chlorine free with modified alkyd resin unobjectionable in physiological & toxicological respect. Additional External Coating : Silver Streak Aluminium Paint suitable for corrosive environment.

PIPING MATERIAL SPECIFICATION

CONTENTS:-

Sr. No.	Description	Sheet No
1	PIPING MATERIAL SPECIFICATION - A3A	2 of 16
2	PIPING MATERIAL SPECIFICATION - B7A	7 of 16
3	PIPING MATERIAL SPECIFICATION - B7A	12 of 16

0	08.10.26	ISSUED FOR ENGINEERING	PC	RBP	VJS
REV	DATE	PURPOSE	BY	CHK.	APPR.

PIPING MATERIAL SPECIFICATION
FOR CLASS A3A

			Pankaj S	Rakesh Sparchak	
0	08.10.26	ISSUED FOR APPROVAL	PC	RBP	VJS
REV	DATE	DESCRIPTION	PREPARED BY	CHECKED BY	APPROVED BY

		PIPING MATERIAL SPECIFICATION **A3A**												
DOC. NO. :	**EJB-2026-02-030-PIP-MDS-002**	**CLIENT :**	**SUN PETROCHEMICALS PVT LTD**										**SHEET :**	**2 OF 5**
PROJECT NO. :	**EJB-2026-02-030**	**PROJECT :**	**NEW CRUDE OIL PUMP HOUSE AT CPF**										**REV :**	**0**
ASME CLASS	**CORROSION ALLOWANCE**	**TEMPERATURE**	**°C**	-29	38	50	100	150					**PIPE CLASS:**	
150#	1.6 mm	**PRESSURE**	**kg/cm² g**	19.98	19.98	19.57	18.04	16.11					**A3A**	

SERVICE:	DIESEL,FULE GAS/BLANKETING GAS, HOT OIL SUPPLY, HOT OIL RETURN, SERVO GAS
BASIC MATERIAL :	CARBON STEEL

NOTES:

1) BUTT WELDED JOINT- 100% VISUAL, 10% RADIOGRAPHY
2) BRANCH CONNECTION- 100% VISUAL; DYE PENETRANT TEST-10% (FOR ROOT RUN/FINAL RUN)
3) VENT & DRAIN SHALL HAVE FLANGED ENDS.
4) TYPE OF STRAINERS ARE TENTATIVE, SELECTION OF STRAINER WILL BE AS PER P&ID
5) FOR VALVE REFER RESPECTIVE VALVE DATA SHEET.

ITEM	**SIZE**	**DESCRIPTION**
MAINTENANCE JOINTS	ALL	FLANGED, TO BE KEPT JUST SUFFICIENT FOR MAINTENANCE.
PIPE JOINTS	40 NB & BELOW	SW
	50 NB & ABOVE	BUTTWELDED
DRAIN (HYDRO)	ALL	25 NB
VENT (HYDRO)	ALL	15 NB
TEMP. CONN.	40 NB OR AS PER P&ID	FLANGED
PRESS. CONN.	25 NB OR AS PER P&ID	AS PER P&ID

		PIPING MATERIAL SPECIFICATION A3A			
DOC. NO. :	EJB-2026-02-030-PIP-MDS-002	CLIENT :	SUN PETROCHEMICALS PVT LTD	SHEET :	3 OF 5
PROJECT NO. :	EJB-2026-02-030	PROJECT :	NEW CRUDE OIL PUMP HOUSE AT CPF	REV :	0

ASME CLASS	CORROSION ALLOWANCE	BRANCH TABLE	PIPE CLASS:
150#	1.6 mm		A3A

T	TEES BW (EQ. OR RED.)
TS	TEES SW (EQ. OR RED.)
H	HALF COUPLING (SW)
P	PIPE TO PIPE
R	PIPE TO PIPE, REINFORCED

BRANCH PIPE	15	20	25	40	50	80	100	150	200	250	300
300											T
250										T	T
200									T	T	T
150								T	T	T	P
100							T	T	T	P	P
80						T	T	T	P	P	P
50					T	T	T	P	P	P	P
40				TS	T	H	H	H	H	H	H
25			TS	TS	H	H	H	H	H	H	H
20		TS	TS	TS	H	H	H	H	H	H	H
15	TS	TS	TS	TS	H	H	H	H	H	H	H
RUN PIPE											

		PIPING MATERIAL SPECIFICATION A3A				
DOC. NO. :	EJB-2026-02-030-PIP-MDS-002	CLIENT :	SUN PETROCHEMICALS PVT LTD		SHEET :	4 OF 5
PROJECT NO. :	EJB-2026-02-030	PROJECT :	NEW CRUDE OIL PUMP HOUSE AT CPF		REV :	0
ASME CLASS	CORROSION ALLOWANCE				PIPE CLASS:	
150#	1.6 mm				A3A	

ITEM	TYPE	END CONN.	DIAMETER RANGE		SCH./THK.	FACE/ FINISH /RADIUS	DESIGN STD.	MATERIAL	REMARKS
			LOW	HIGH				DESCRIPTION	
PIPE	PIPE	PE	15	40	SCH. 80	-	ASME B36.10	ASTM A 106 GR. B (SEAMLESS)	
	PIPE	BE	50	150	SCH. 40	-	ASME B36.10	ASTM A 106 GR. B (SEAMLESS)	
	PIPE	BE	200	300	SCH. 20	-	ASME B36.10	ASTM A 106 GR. B (SEAMLESS)	
	NIPPLE	PBE/PE-NPT	15	40	SCH. 80		ASME B36.10	ASTM A 106 GR. B (SEAMLESS)	
FLANGES	SOCKET WELD	RF	15	40	150#/ SCH. 80	125-250 µAARH	ASME B16.5	ASTM A 105	
	SLIP ON	RF	50	300	150#	125-250 µAARH	ASME B16.5	ASTM A 105	
	BLIND	RF	15	300	150#	125-250 µAARH	ASME B16.5	ASTM A 105	
	SPECTACLE BLIND	FF	15	300	150#	125-250 µAARH	ASME B16.48	ASTM A 105	
FITTINGS	ELBOW 90°/45°	SW	15	40	3000#	-	ASME B16.11	ASTM A 105	
	ELBOW 90°/45°	BW	50	150	SCH. 40	R = 1.5D	ASME B16.9	ASTM A 234 GR. WPB-S	
	ELBOW 90°/45°	BW	200	300	SCH. 20	R = 1.5D	ASME B16.9	ASTM A 234 GR. WPB-S	
	EQUAL/RED. TEE	SW	15	40	3000#	-	ASME B16.11	ASTM A 105	
	EQUAL/RED. TEE	BW	50	150	SCH. 40	-	ASME B16.9	ASTM A 234 GR. WPB-S	
	EQUAL/RED. TEE	BW	200	300	SCH. 20	-	ASME B16.9	ASTM A 234 GR. WPB-S	
	CONC./ECC RED.	BW	50	150	SCH. 40	-	ASME B16.9	ASTM A 234 GR. WPB-S	
	CONC./ECC RED.	BW	200	300	SCH. 20	-	ASME B16.9	ASTM A 234 GR. WPB-S	
	CONC./ECC SWG.	PBE	15	80	3000#	-	BS 3799	ASTM A 105	
	CAP	SW	15	40	3000#	-	ASME B16.11	ASTM A 105	
	CAP	BW	50	150	SCH. 40	-	ASME B16.9	ASTM A 234 GR. WPB-S	
	CAP	BW	200	300	SCH. 20	-	ASME B16.9	ASTM A 234 GR. WPB-S	
	FULL COUPLING	SW	15	40	3000#	-	ASME B16.11	ASTM A 105	
	FULL COUPLING	NPT	15	40	3000#	-	ASME B16.11	ASTM A 105	
	HALF COUPLING	SW	15	40	3000#	-	ASME B16.11	ASTM A 105	

		PIPING MATERIAL SPECIFICATION **A3A**			
DOC. NO. :	**EJB-2026-02-030-PIP-MDS-002**	**CLIENT :**	**SUN PETROCHEMICALS PVT LTD**	**SHEET :**	**4 OF 5**
PROJECT NO. :	**EJB-2026-02-030**	**PROJECT :**	**NEW CRUDE OIL PUMP HOUSE AT CPF**	**REV :**	**0**
ASME CLASS	**CORROSION ALLOWANCE**			**PIPE CLASS:**	
150#	1.6 mm			**A3A**	

ITEM	TYPE	END CONN.	DIAMETER RANGE		SCH./THK.	FACE/ FINISH /RADIUS	DESIGN STD.	MATERIAL	REMARKS
			LOW	HIGH				DESCRIPTION	
VALVES	BALL VALVE (REDUCE BORE)	RF/ B16.5	15	300	150#	125-250 µAARH	BS EN ISO 17292	BODY: ASTM A 216 GR. WCB, TRIM: SS304, SEAT: PTFE	
	GLOBE VALVE	RF/ B16.5	50	100	150#	125-250 µAARH	BS 1873	BODY: ASTM A 216 GR. WCB, TRIM: 13% CR. STEEL	
	CHECK VALVE (LIFT TYPE)	SAND CONN. B16.5	15	40	150#	125-250 µAARH	MNF. STD.	BODY: ASTM A 105 / A 216 Gr. WCB, TRIM: 13% CR. STEEL	
	CHECK VALVE (SWING DISC)	RF/ B16.5	50	300	150#	125-250 µAARH	API 594	BODY: ASTM A 216 GR. WCB, TRIM: 13% CR. STEEL	
	BUTTERFLY VALVE	SAND CONN. B16.5	80	300	150#	125-250 µAARH	API 609	BODY: ASTM A 216 GR WCB; TRIM & SPINDLE: 13% CR STEEL; SEAT: PTFE; DISC: PTFE LINED	
	GATE VALVE	SW,3000#/B16.11	15	40	800#	125-250 µAARH	API 602	BODY: ASTM A 105, TRIM: 13% CR. STEEL	
	GATE VALVE	RF/ B16.5	50	300	150#	125-250 µAARH	API 600	BODY: ASTM A 216 GR WCB; TRIM: 13% CR STEEL	
GASKET/ BOLT	STUD BOLT	-	15	300	-	-	ASME B18.2.1 ASME B18.2.2	BOLT : A193 GR. B7, NUT : A194 GR. 2H	
	GASKET	-	15	300	4.5 mm/ 150#	-	ASME B16.21 ASME B16.5	SPIRAL WOUND PTFE FILL, SS304 INNER RING / CS OUTER RINGS	
STRAINERS	Y-TYPE STRAINER	RF/ B16.5	15	80	150#	125-250 µAARH	MNF. STD	BODY: ASTM A 216 GR. WCB, TRIM: 13% CR. STEEL	
	BASKET TYPE STRAINER	RF/ B16.5	100	300	150#	125-250 µAARH	MNF. STD	BODY: ASTM A 216 GR. WCB, TRIM: 13% CR. STEEL	

PIPING MATERIAL SPECIFICATION
FOR CLASS B7A

			Pankaj S		
0	09.10.26	ISSUED FOR APPROVAL	PC	RBP	VJS
REV	**DATE**	**DESCRIPTION**	**PREPARED BY**	**CHECKED BY**	**APPROVED BY**

		PIPING MATERIAL SPECIFICATION **B7A**													
DOC. NO. :	**EJB-2026-02-030-PIP-MDS-002**	**CLIENT :**	**SUN PETROCHEMICALS PVT LTD**											**SHEET :**	**2 OF 5**
PROJECT NO. :	**EJB-2026-02-030**	**PROJECT :**	**NEW CRUDE OIL PUMP HOUSE AT CPF**											**REV :**	**0**
ASME CLASS	**CORROSION ALLOWANCE**	**TEMPERATURE**	**°C**	-29	38	50	100	150						**PIPE CLASS:**	
300#	3 mm	**PRESSURE**	**kg/cm² g**	52.11	52.11	51.08	47.52	45.98						**B7A**	

SERVICE:	PROCESS LIQUID, PROCESS VAPOR
BASIC MATERIAL :	CARBON STEEL (SEAMLESS)

NOTES:

1) NDT OF WELDS SHALL BE AS FOLLOWS :

RADIOGRAPHY : ALL BUTT WELDS - 100%

MPI : SOCKET WELD - 100%

2) ALL VENT AND DRAIN SHALL BE PROVIDED WITH GATE VALVE WITH BLIND FLANGE ASSEMBLY UNLESS OTHERWISE INDICATED IN P & ID.

3) PIPING DESIGN AS PER ASME B31.3

4) ALL BRANCH CONNECTIONS INCLUDING VENT, DRAIN, PRESSURE AND TEMPERATURE CONNECTION SHALL BE AS PER BRANCH CONNECTION TABLE.

5) FOR VALVE REFER RESPECTIVE VALVE DATA SHEET.

ITEM	**SIZE**	**DESCRIPTION**
MAINTENANCE JOINTS	ALL	FLANGED, TO BE KEPT MINIMUM
PIPE JOINTS	40 NB & BELOW	FULL COUPLING
	50 NB & ABOVE	BUTTWELDED
DRAIN (HYDRO)	ALL	25 NB
VENT (HYDRO)	ALL	15 NB
TEMP. CONN.	40 NB OR AS PER P&ID	FLANGED
PRESS. CONN.	25 NB OR AS PER P&ID	HALF COUPLING+PIPE+FLANGE+VALVE (SPEC. AS PER P&ID)

		PIPING MATERIAL SPECIFICATION B7A			
DOC. NO. :	EJB-2026-02-030-PIP-MDS-002	CLIENT :	SUN PETROCHEMICALS PVT LTD	SHEET :	3 OF 5
PROJECT NO. :	EJB-2026-02-030	PROJECT :	NEW CRUDE OIL PUMP HOUSE AT CPF	REV :	0

ASME CLASS	CORROSION ALLOWANCE	BRANCH TABLE	PIPE CLASS:
300#	3 mm		B7A
T	TEES/ RED. TEE		
W	WELDOLETS		
S	SOCKOLETS		

RUN PIPE → / BRANCH PIPE ↓	20	25	40	50	80	100	150	200	250	300	350	400
400	T	T	T	S	S	S	S	S	S	S	S	S
350	T	T	T	S	S	S	S	S	S	S	S	S
300	T	T	T	S	S	S	S	S	S	S	S	S
250	T	T	T	S	S	S	S	S	S	S	S	S
200	T	T	T	S	S	S	S	S	S	S	S	S
150	T	T	T	S	S	S	S	S	S	S	S	S
100	T	T	T	W	W	W	W	W	W	W	S	S
80	T	T	T	W	W	W	W	W	W	W	S	S
50	T	T	T	W	W	W	W	W	W	W	S	S
40	T	T	T	S	S	S	S	S	S	S	S	S
25	T	T	T	S	S	S	S	S	S	S	S	S
20	T	T	T	S	S	S	S	S	S	S	S	S
15	T	T	T	S	S	S	S	S	S	S	S	S

			PIPING MATERIAL SPECIFICATION B7A							
DOC. NO. :	EJB-2026-02-030-PIP-MDS-002		CLIENT :	SUN PETROCHEMICALS PVT LTD					SHEET :	4 OF 5
PROJECT NO. :	EJB-2026-02-030		PROJECT :	NEW CRUDE OIL PUMP HOUSE AT CPF					REV :	0
ASME CLASS	CORROSION ALLOWANCE								PIPE CLASS:	
300#	3 mm								B7A	

ITEM	TYPE	END CONN.	DIAMETER RANGE		SCH./THK.	FACE/ FINISH /RADIUS	DESIGN STD.	MATERIAL	REMARKS
			LOW	HIGH				DESCRIPTION	
PIPE	PIPE	PE	15	20	SCH. 160	-	ASME B36.10	ASTM A 106 GR. B (SEAMLESS)	
	PIPE	PE	25	40	SCH. 80	-	ASME B36.10	ASTM A 106 GR. B (SEAMLESS)	
	PIPE	BE	50	50	SCH. 80	-	ASME B36.10	ASTM A 106 GR. B (SEAMLESS)	
	PIPE	BE	80	400	SCH. 40	-	ASME B36.10	ASTM A 106 GR. B (SEAMLESS)	
	NIPPLE	PBE/ PE-NPT	15	40	SCH. 160	-	ASME B36.10	ASTM A 106 GR. B (SEAMLESS)	
FLANGES	SOCKET WELD	RF	15	40	300#/ SCH.160	125-250 µAARH	ASME B16.5	ASTM A 105	
	WELD NECK	RF	50	50	300# / SCH.80	125-250 µAARH	ASME B16.5	ASTM A 105	
	WELD NECK	RF	80	400	300# / SCH.40	125-250 µAARH	ASME B16.5	ASTM A 105	
	BLIND FLANGE	RF	15	400	300#	125-250 µAARH	ASME B16.5	ASTM A 105	
	SPECTACLE BLIND	FF	15	40	300#	125-250 µAARH	ASME B16.48	ASTM A 105	
	SPECTACLE BLIND	FF	50	150	300#	125-250 µAARH	ASME B16.48	ASTM A 105	
FITTINGS	ELBOW 90°/45°	SW	15	20	6000#	-	ASME B16.11	ASTM A 105	
	ELBOW 90°/45°	SW	25	40	3000#	-	ASME B16.11	ASTM A 105	
	ELBOW 90°/45°	BW	50	50	SCH.80	R = 1.5D	ASME B16.9	ASTM A 234 GR. WPB-S	
	ELBOW 90°/45°	BW	80	400	SCH.40	R = 1.5D	ASME B16.9	ASTM A 234 GR. WPB-S	
	EQUAL/RED. TEE	SW	15	20	6000#	-	ASME B16.11	ASTM A 105	
	EQUAL/RED. TEE	SW	25	40	3000#	-	ASME B16.11	ASTM A 105	
	EQUAL/RED. TEE	BW	50	50	SCH.80	-	ASME B16.9	ASTM A 234 GR. WPB-S	
	EQUAL/RED. TEE	BW	80	400	SCH.40	-	ASME B16.9	ASTM A 234 GR. WPB-S	
	CONC./ECC RED.	BW	80	400	SCH.40	-	ASME B16.9	ASTM A 234 GR. WPB -S	
	CONC./ECC SWG.	PBE	15	80	3000#	-	BS 3799	ASTM A 105	
	CAP	SW	15	20	6000#	-	ASME B16.11	ASTM A 105	
	CAP	SW	25	40	3000#	-	ASME B16.11	ASTM A 105	
	CAP	BW	50	50	SCH.80	-	ASME B16.9	ASTM A 234 GR. WPB -S	
	CAP	BW	80	400	SCH.40	-	ASME B16.9	ASTM A 234 GR. WPB -S	

		PIPING MATERIAL SPECIFICATION B7A				
DOC. NO. :	EJB-2026-02-030-PIP-MDS-002	CLIENT :	SUN PETROCHEMICALS PVT LTD		SHEET :	4 OF 5
PROJECT NO. :	EJB-2026-02-030	PROJECT :	NEW CRUDE OIL PUMP HOUSE AT CPF		REV :	0
ASME CLASS	CORROSION ALLOWANCE				PIPE CLASS:	
300#	3 mm				B7A	

ITEM	TYPE	END CONN.	DIAMETER RANGE		SCH./THK.	FACE/ FINISH /RADIUS	DESIGN STD.	MATERIAL	REMARKS
			LOW	HIGH				DESCRIPTION	
FITTINGS	FULL COUPLING	SW / NPT	15	20	6000#	-	ASME B16.11	ASTM A 105	
	FULL COUPLING	SW / NPT	25	40	3000#	-	ASME B16.11	ASTM A 105	
	HALF COUPLING	SW	15	20	6000#	-	ASME B16.11	ASTM A 105	
	HALF COUPLING	SW	25	40	3000#	-	ASME B16.11	ASTM A 105	
	SOCKOLET	SW	15	20	6000#	-	MSS SP 97	ASTM A 105	
	SOCKOLET	SW	25	40	3000#	-	MSS SP 97	ASTM A 105	
	WELDOLET	BW	50	50	SCH.80	-	MSS SP 97	ASTM A 105	
	WELDOLET	BW	80	150	SCH.40	-	MSS SP 97	ASTM A 105	
VALVES	BALL VALVE (REDUCE BORE)	RF/ B16.5	15	40	300#	125-250 µAARH	EN ISO 17292	BODY: ASTM A 105,SEAT: RPTFE	
	BALL VALVE (FULL BORE)	RF/ B16.5	50	400	300#	125-250 µAARH	EN ISO 17292	BODY: ASTM A 216 GR. WCB, TRIM SEAT AISI 4140	
	GATE VALVE	SW	15	40	800#	-	API-602	BODY : ASTM A 105, TRIM- STELLITED.	
	GATE VALVE	RF/ B16.5	50	400	300#	125-250 µAARH	API-600	BODY-ASTM A 216 GR.WCB, TRIM-STELLITED, STEM-13% CR. STEEL.	
	GLOBE VALVE	SW	15	40	800#	-	EN ISO 15761	BODY : ASTM A 105, TRIM- STELLITED, STEM - 13% CR. STEEL	
	GLOBE VALVE	RF/ B16.5	50	400	300#	125-250 µAARH	BS-1873	BODY-ASTM A 216 GR.WCB, TRIM-STELLITED, STEM-13% CR. STEEL.	
	CHECK VALVE (LIFT)	SW	15	40	800#	-	EN ISO 15761	BODY - ASTM A 105, TRIM - STELLITED.	
	CHECK VALVE (SWING CHECK)	RF/ B16.5	50	400	300#	125-250 µAARH	API-594	BODY-ASTM A 216 GR.WCB, TRIM-STELLITED, STEM-13% CR. STEEL.	
GASKET/ BOLT	STUD BOLT	-	15	400	-	-	ASME B18.2.1 ASME B18.2.2	BOLT : A 193 GR. B7 NUT : A 194 GR. 2H	
	GASKET	-	15	400	4.5MM THK./300#	-	ASME B16.20 ASME B16.5	SPIRAL WOUND GRAPHOIL FILLED, SS316 INNER AND CS OUTER RINGS.	

PIPING MATERIAL SPECIFICATION
FOR CLASS D7A

			Pankaj S		
0	09.10.26	ISSUED FOR APPROVAL	PC	RBP	VJS
REV	**DATE**	**DESCRIPTION**	**PREPARED BY**	**CHECKED BY**	**APPROVED BY**

		PIPING MATERIAL SPECIFICATION **D7A**													
DOC. NO. :	**EJB-2026-02-030-PIP-MDS-002**	**CLIENT :**	**SUN PETROCHEMICALS PVT LTD**											**SHEET :**	**2 OF 5**
PROJECT NO. :	**EJB-2026-02-030**	**PROJECT :**	**NEW CRUDE OIL PUMP HOUSE AT CPF**											**REV :**	**0**
ASME CLASS	**CORROSION ALLOWANCE**	**TEMPERATURE**	**°C**	-29	38	50	100							**PIPE CLASS:**	
600#	3 mm	**PRESSURE**	**kg/cm² g**	104.11	104.11	102.17	95.03							**D7A**	

SERVICE:	PROCESS LIQUID
BASIC MATERIAL :	CARBON STEEL (SEAMLESS)

NOTES:

1) NDT OF WELDS SHALL BE AS FOLLOWS :

RADIOGRAPHY : ALL BUTT WELDS - 100%

MPI : SOCKET WELD - 100%

2) ALL VENT AND DRAIN SHALL BE PROVIDED WITH GATE VALVE WITH BLIND FLANGE ASSEMBLY UNLESS OTHERWISE INDICATED IN P & ID.

3) PIPING DESIGN AS PER ASME B31.4 & OISD 141

4) CHARPHY V-NOTCH TEST & HARDNESS TEST SHALL BE CONDUCTED FOR PIPE , FITTINGS AND FLANGES.

5) ALL BRANCH CONNECTIONS INCLUDING VENT, DRAIN, PRESSURE AND TEMPERATURE CONNECTION SHALL BE AS PER BRANCH CONNECTION TABLE.

6) FOR VALVE REFER RESPECTIVE VALVE DATA SHEET.

7) BARRED TEE SHALL BE WELDED TYPE FOR USE IN MAINLINE ONLY. MATERIAL SHALL BE AS PER ATTACHED TABLE-1 FOR PIPELINE SPECIALITY ITEMS.

8) LR BEND, IJ, L/R, PIG SIG. SHALL BE FOR USE IN MAINLINE ONLY.

ITEM	**SIZE**	**DESCRIPTION**
MAINTENANCE JOINTS	ALL	FLANGED, TO BE KEPT MINIMUM
PIPE JOINTS	40 NB & BELOW	FULL COUPLING
	50 NB & ABOVE	BUTTWELDED
DRAIN (HYDRO)	ALL	25 NB
VENT (HYDRO)	ALL	15 NB
TEMP. CONN.	40 NB OR AS PER P&ID	FLANGED
PRESS. CONN.	25 NB OR AS PER P&ID	HALF COUPLING+PIPE+FLANGE+VALVE (SPEC. AS PER P&ID)

	PIPING MATERIAL SPECIFICATION D7A				
DOC. NO. :	EJB-2026-02-030-PIP-MDS-002	CLIENT :	SUN PETROCHEMICALS PVT LTD	SHEET :	3 OF 5
PROJECT NO. :	EJB-2026-02-030	PROJECT :	NEW CRUDE OIL PUMP HOUSE AT CPF	REV :	0

ASME CLASS	CORROSION ALLOWANCE	BRANCH TABLE	PIPE CLASS:
600#	3 mm		D7A
T	TEES/ RED. TEE		
W	WELDOLETS		
S	SOCKOLETS		

							T	250	BRANCH PIPE
						T	T	200	
					T	T	T	150	
				T	T	T	W	100	
			T	T	T	W	W	80	
		T	T	T	W	W	S	50	
	T	S	S	S	S	S	S	40	
T	T	S	S	S	S	S	S	25	
T	T	S	S	S	S	S	S	20	
T	T	S	S	S	S	S	S	15	
20	25	40	50	80	100	150	200	250	
RUN PIPE									

			PIPING MATERIAL SPECIFICATION D7A						
DOC. NO. :	EJB-2026-02-030-PIP-MDS-002		CLIENT :	SUN PETROCHEMICALS PVT LTD				SHEET :	4 OF 5
PROJECT NO. :	EJB-2026-02-030		PROJECT :	NEW CRUDE OIL PUMP HOUSE AT CPF				REV :	0
ASME CLASS	CORROSION ALLOWANCE							PIPE CLASS:	
600#	3 mm							D7A	

ITEM	TYPE	END CONN.	DIAMETER RANGE		SCH./THK.	FACE/ FINISH /RADIUS	DESIGN STD.	MATERIAL	REMARKS
			LOW	HIGH				DESCRIPTION	
PIPE	PIPE	PE	15	40	SCH. 160	-	ASME B36.10	ASTM A 106 GR. B (SEAMLESS)	
	PIPE	BE	50	50	SCH. 160	-	ASME B36.10	ASTM A 106 GR. B (SEAMLESS)	
	PIPE	BE	80	250	SCH. 80	-	ASME B36.10	ASTM A 106 GR. B (SEAMLESS)	
	NIPPLE	PBE/ PE-NPT	15	40	SCH. 160	-	ASME B36.10	ASTM A 106 GR. B (SEAMLESS)	
FLANGES	SOCKET WELD	RF	15	40	600#/ SCH.160	125-250 µAARH	ASME B16.5	ASTM A 105	
	WELD NECK	RF	50	50	600# / SCH.160	125-250 µAARH	ASME B16.5	ASTM A 105	
	WELD NECK	RF	80	250	600# / SCH.80	125-250 µAARH	ASME B16.5	ASTM A 105	
	BLIND FLANGE	RF	15	250	600#	125-250 µAARH	ASME B16.5	ASTM A 105	
	SPECTACLE BLIND	RF	15	40	600#	125-250 µAARH	ASME B16.48	ASTM A 105	
	SPECTACLE BLIND	RF	50	250	600#	125-250 µAARH	ASME B16.48	ASTM A 105	
FITTINGS	ELBOW 90°/45°	SW	15	40	3000#	-	ASME B16.11	ASTM A 105	
	ELBOW 90°/45°	BW	50	50	SCH.160	R = 1.5D	ASME B16.9	ASTM A 234 GR. WPB-S	
	ELBOW 90°/45°	BW	80	250	SCH.80	R = 1.5D	ASME B16.9	ASTM A 234 GR. WPB-S	
	EQUAL/RED. TEE	SW	15	40	3000#	-	ASME B16.11	ASTM A 105	
	EQUAL/RED. TEE	BW	50	50	SCH.160	-	ASME B16.9	ASTM A 234 GR. WPB-S	
	EQUAL/RED. TEE	BW	80	250	SCH.80	-	ASME B16.9	ASTM A 234 GR. WPB-S	
	CONC./ECC RED.	BW	50	50	SCH.160	-	ASME B16.9	ASTM A 234 GR. WPB -S	
	CONC./ECC SWG.	BW	80	250	SCH.80	-	ASME B16.9	ASTM A 234 GR. WPB -S	
	CONC./ECC SWG.	PBE	15	80	3000#	-	BS 3799	ASTM A 105	
	CAP	SW	15	40	6000#	-	ASME B16.11	ASTM A 105	
	CAP	BW	50	50	SCH.160	-	ASME B16.9	ASTM A 234 GR. WPB-S	
	CAP	BW	80	250	SCH.80	-	ASME B16.9	ASTM A 234 GR. WPB-S	

sun Petrochemicals			PIPING MATERIAL SPECIFICATION D7A					NAVITERA	
DOC. NO. :	EJB-2026-02-030-PIP-MDS-002		CLIENT :	SUN PETROCHEMICALS PVT LTD				SHEET :	4 OF 5
PROJECT NO. :	EJB-2026-02-030		PROJECT :	NEW CRUDE OIL PUMP HOUSE AT CPF				REV :	0
ASME CLASS	CORROSION ALLOWANCE							PIPE CLASS:	
600#	3 mm							D7A	

ITEM	TYPE	END CONN.	DIAMETER RANGE		SCH./THK.	FACE/ FINISH /RADIUS	DESIGN STD.	MATERIAL	REMARKS
			LOW	HIGH				DESCRIPTION	
FITTINGS	FULL COUPLING	SW / NPT	15	40	6000#	-	ASME B16.11	ASTM A 105	
	HALF COUPLING	SW	15	40	6000#	-	ASME B16.11	ASTM A 105	
	SOCKOLET	SW	15	40	6000#	-	MSS SP 97	ASTM A 105	
	WELDOLET	BW	50	50	SCH.160	-	MSS SP 97	ASTM A 105	
	WELDOLET	BW	80	250	SCH.80	-	MSS SP 97	ASTM A 105	
VALVES	BALL VALVE (FULL BORE)	RF/ B16.5	15	40	600#	125-250 µAARH	EN ISO 17292	BODY: ASTM A 105,SEAT: RPTFE	
	BALL VALVE (FULL BORE)	RF/ B16.5	50	250	600#	125-250 µAARH	EN ISO 17293	BODY: ASTM A 216 GR. WCB, TRIM SEAT AISI 4140	
	GATE VALVE	SW	15	40	800#	-	API-602	BODY : ASTM A 105, TRIM- STELLITED.	
	GATE VALVE	RF/ B16.5	50	250	600#	125-250 µAARH	API-600	BODY-ASTM A 216 GR.WCB, TRIM-STELLITED, STEM-13% CR. STEEL.	
	GLOBE VALVE	SW	15	40	800#	-	BS-1873	BODY : ASTM A 105, TRIM- STELLITED, STEM - 13% CR. STEEL	
	GLOBE VALVE	RF/ B16.5	50	250	600#	125-250 µAARH	BS-1873	BODY-ASTM A 216 GR.WCB, TRIM-STELLITED, STEM-13% CR. STEEL.	
	CHECK VALVE	SW	15	40	800#	-	EN ISO 15761	BODY - ASTM A 105, TRIM - STELLITED.	
	CHECK VALVE	RF/ B16.5	50	250	600#	125-250 µAARH	API 594	BODY-ASTM A 216 GR.WCB, TRIM-STELLITED, STEM-13% CR. STEEL.	
GASKET/ BOLT	STUD BOLT	-	15	250	-	-	ASME B18.2.1 ASME B18.2.2	BOLT : A 193 GR. B7 NUT : A 194 GR. 2H	
	GASKET	-	15	250	4.5MM THK./600#	-	ASME B16.20 ASME B16.5	SPIRAL WOUND GRAPHOIL FILLED, SS316 INNER AND CS OUTER RINGS.	

HOT OIL SUPPLY
HOT OIL RETURN
BY OTHER
BY OTHER
HOS
HOR

T-101 G STORAGE TANK
T-101 H STORAGE TANK
T-101 I STORAGE TANK
T-101 J STORAGE TANK
T-101 K STORAGE TANK
T-101 L STORAGE TANK

DKYE WALL
DKYE WALL
TANK FARM BL
PUMP HOUSE BL
TANK FRAM BL
PUMP HOUSE BL

TP 01 TP 02 TP 03 TP 04 TP 05 TP 06 TP 07 TP 08 TP 09 TP 10 TP 11 TP 12 TP 13 TP 14 TP 15 TP 16 TP 17 TP 18 TP 19 TP 20 TP 21 TP 22 TP 23 TP 24 TP 25 TP 26 TP 27 TP 28 TP 29 TP 30

FROM STABILIZING VESSEL — OFFSITE / NEW PROCESS AREA / PUMP HOUSE — OIL PRODUCTION HEADER — 213 m3/hr — 16"
EJB-2026-02-030-PRO-DWG-001 SH.2 OF 3

OFFSITE / NEW A/G PUMP HOUSE — BY DIRECTION FLOW — OIL DISPATCH HEADER — 400 m3/hr — 16"
EJB-2026-02-030-PRO-DWG-001 SH.3 OF 3

TANK BOTTOM RECYCLE HEADER — 45m3/hr — 6"

RECIRCULATION HEADER — 45 m3/hr — 6"

SAMPLING HEADER — 2"

OFFSITE / NEW A/G PUMP HOUSE — SERVO GAS — 2"
EJB-2026-02-030-PRO-DWG-001 SH.1 OF 3

OFFSITE / NEW A/G PUMP HOUSE — TANK FARM INTER TRANSFER — 8" — 200 m3/hr
EJB-2026-02-030-PRO-DWG-001 SH.3 OF 3

DELETED

OFFSITE / NEW U/G PUMP HOUSE — TO HEAT EXCHANGER (WELL FLUID CRUID OIL INTERCHANGE) — 4"
EJB-2026-02-030-PRO-DWG-001 SH.2 OF 3
PROCESS AREA

FCV — 200 m3/hr — 8" — 4" — 12" — 14" — 400 m3/hr

OFFSITE / NEW A/G PUMP HOUSE — TO EXPORT — 400 m3/hr
EJB-2026-02-030-PRO-DWG-001 SH.2 OF 3
PROCESS AREA NEAR EXISTING PIG LAUNCHER

FIC — BPCV — MOV — TP 38 TP 37 TP 35 TP 33 TP 34 TP 31

45 m3/hr — 45 m3/hr — 4" — 6" — 4" — 6"

P-201 B TANK BOTTOM RECYCLE PUMP 45 m3/hr
P-201 A TANK BOTTOM RECYCLE PUMP 45 m3/hr

P-102 E OIL EXPORT PUMP 200 m3/hr (WORKING)
P-102 F OIL EXPORT PUMP 200 m3/hr (STANDBY)
P-102 G OIL EXPORT PUMP 200 m3/hr (FUTURE)

P-101 G BOOSTER PUMP 200 m3/hr (FUTURE)
P-101 F BOOSTER PUMP 200 m3/hr (STANDBY)
P-101 E BOOSTER PUMP 200 m3/hr (WORKING)

OFFSITE / NEW U/G PUMP HOUSE — DRAIN PIT TRANSFER LINE TO EXISTING CBD VESSEL AREA V-104 — 2"
EJB-2026-02-030-PRO-DWG-001 SH.2 OF 3
PROCESS AREA

6 m3/hr — 2" — 6 m3/hr — 4"

P-202 A PUMP HOUSE DRAIN PIT OIL LIFTING PUMP 6 m3/hr — 4"
P-202 B PUMP HOUSE DRAIN PIT OIL LIFTING PUMP 6 m3/hr

DRAIN PIT

TAG. NO.	P-101 E/F/G	P-102 E/F/G	P-201 A/B	P-202 A/B
TITLE	OIL BOOSTER PUMP	OIL EXPORT PUMP	TANK BOTTOM RECYCLE PUMP	PUMP HOUSE DRAIN PIT OIL LIFTING PUMP
DESCRIPTION	TYPE : CENTRIFUGAL (VERTICAL BARREL CAN TYPE)	TYPE : CENTRIFUGAL	TYPE : CENTRIFUGAL	TYPE : GEAR
	CAPACITY : 200 m^3/hr	CAPACITY : 200 m^3/hr	CAPACITY : 45 m^3/hr	CAPACITY : 6 m^3/hr
	DIFF PR : 28.32 kg/cm^2	DIFF PR : 66.49 kg/cm^2	DIFF PR : 8.2 kg/cm^2	DIFF PR : 3 kg/cm^2
	DISH. PR : 29.33 kg/cm g	DISH. PR : 72.43 kg/cm g	DISH. PR : 8.2 kg/cm g	DISH. PR : 3 kg/cm g
	MOC : CS	MOC : CS	MOC : SS 316	MOC : CS
	MOTOR KW : 315	MOTOR KW : 425	MOTOR KW : 13.4	MOTOR KW : 0.5
	ELEVATION : AT GRADE	ELEVATION : AT GRADE	ELEVATION : AT GRADE	ELEVATION : AT GRADE

GENERAL NOTES

1. ALL DIMENSIONS IN MM.

LEGEND

- BALL VALVE
- NRV
- AUTOMATIC RECIRCULATION VALVE
- BASKET STRAINER
- FOOT VALVE
- TP — PIPING TIE–IN FLAG
- LOCALLY MOUNTED INSTRUMENT
- PROCESS LINE
- BY OTHER
- ELECTRICAL TRACING
- GEAR PUMP

HOLDS

1. ALL THE HOLD PUT HERE.

ISSUED FOR APPROVAL

NO	DATE	DESCRIPTION	CREATED	CHECKED	APPROVED
1	28.10.2026	ISSUED FOR APPROVAL	PC	RBP	YS
0	28.10.2026	ISSUED FOR REVIEW	PC	RBP	YS

PROJECT: NEW CRUDE OIL TANKFARM PUMP HOUSE AT CPF
CLIENT: SUN PETROCHEMICALS PVT. LIMITED
DRAWING TITLE: PFD - NEW PUMP HOUSE
NTS | A0 | EJB-2026-02-030-PRO-DWG-001 | 1 of 3

NAVITERA CONSULTANTS PVT. LTD.
707, One Platinum, Plot No. 8, Section 15, CBD Belapur, Navi Mumbai. Pin: 400614
Tel no: +91 2246197507
E-mail : engineering@navitera.org
Web: www.navitera.org

This drawing or document is the property of Navitera and must in no case wholly or partially be copied, shown or given to a third party without the expressed consent of Navitera.

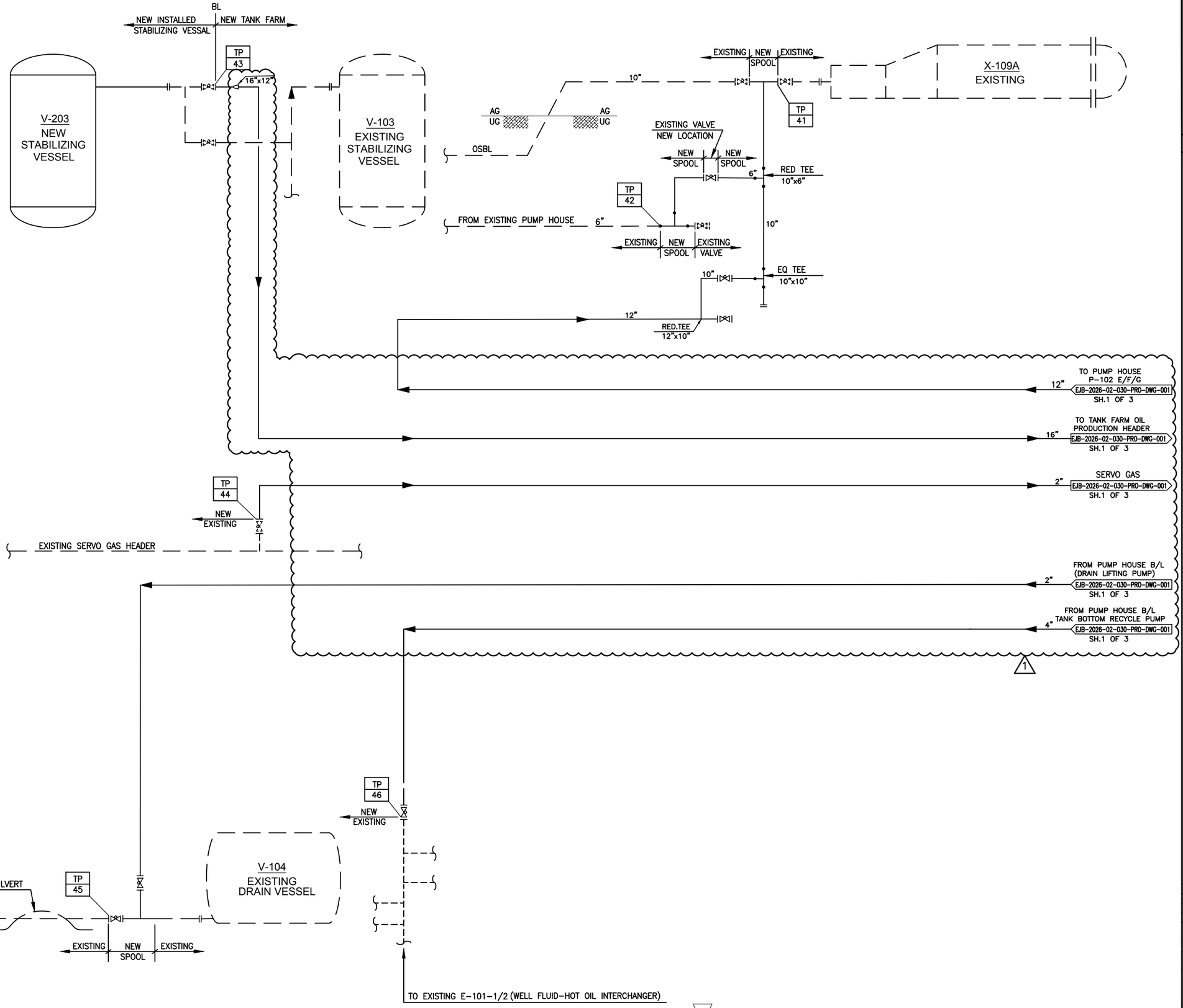

GENERAL NOTES

1. ALL DIMENSIONS IN MM.

HOLDS

1. ALL THE HOLD PUT HERE.

ISSUED FOR APPROVAL

REV	DATE	DESCRIPTION	CREATED	CHECKED	APPROVED
1	28.10.2026	ISSUED FOR APPROVAL	PC	RBP	VS
0	09.10.2026	ISSUED FOR REVIEW	PC	RBP	VS

PROJECT: NEW CRUDE OIL TANKFARM PUMP HOUSE AT CPF

CLIENT: SUN PETROCHEMICALS PVT. LIMITED

DRAWING TITLE: PFD - NEW PUMP HOUSE

Scale: NTS | Format: A1 | Drawing Number: EJB-2026-02-030-PRO-DWG-001 | Sheet No: 2 of 3

NAVITERA CONSULTANTS PVT. LTD.
707, One Platinum, Plot No. 8, Section 15, CBD Belapur, Navi Mumbai. Pin: 400614
Tel no: +91 2246197507
E-mail : engineering@navitera.org
Web: www.navitera.org

This drawing or document is the property of Navitera and must in no case wholly or partially be copied, shown or given to a third party without the expressed consent of Navitera.

Rev: 01

T-101 A
EXISTING
STORAGE TANK

T-101 B
EXISTING
STORAGE TANK

T-101 C
EXISTING
STORAGE TANK

T-101 D
EXISTING
STORAGE TANK

T-101 E
EXISTING
STORAGE TANK

T-101 F
EXISTING
STORAGE TANK

SR. NO	SCENARIO	FROM	TO	REMARKS
PUMP INTER CHANGEABILITY				
01	SCENARIO – 01	OIL DISPATCH HEADER FROM NEW TANK FARM VIA DISPATCH HEADER	TO EXISTING PUMP HOUSE DISPATCH HEADER	USING BYPASS LINE 16"
02	SCENARIO – 02	OIL DISPATCH HEADER FROM EXISTING TANK FARM VIA DISPATCH HEADER	TO NEW PUMP HOUSE DISPATCH HEADER	USING BYPASS LINE 16"
TANK INTER CHANGEABILITY				
03	SCENARIO – 03	OIL DISPATCH HEADER FROM EXISTING TANK FARM VIA EXISTING BOOSTER PUMP DISPATCH HEADER	TO NEW TANK FARM OIL DISPATCH HEADER	USING PRV LINE
04	SCENARIO – 04	OIL DISPATCH HEADER FROM NEW TANK FARM VIA EXISTING BOOSTER PUMP DISPATCH HEADER	TO EXISTING TANK FARM OIL DISPATCH HEADER	USING PRV LINE

1 DELETED

KEY LINE FOR NEW TANK FARM
OIL DISPATCH VIA EXISTING PUMPS

PRV
LP | HP
PRV
16"x8"
16"

1 DELETED

EXISTING PUMP HOUSE
OFF SITE U/G
OFF SITE A/G

02
12"
16"x12"
16"x8"
TP 39
EXISTING OIL DISPATCH HEADER 12"
EXISTING NEW SPOOL
RELOCATE EXISTING SPOOL
EXISTING NEW
TP 40
MIN
03
NEW EXISTING
EXISTING BOOSTER PUMP DISCHARGE HEADER 8"

AG UG
ROAD
CANAL
AG UG
16"

01
16"
BY DIRECTION FLOW
OIL DISPATCH HEADER
EJB-2026-02-030-PRO-DWG-001
SH.1 OF 3
16"x8"
OFFSITE A/G
NEW PUMP HOUSE
04
8"
INTER TANK FARM TRANSFER
NEW BOOSTER PUMP DISCHARGE
EJB-2026-02-030-PRO-DWG-001
SH.1 OF 3
OFFSITE A/G
NEW PUMP HOUSE
1

KEY LINE FOR EXISTING TANK FARM
OIL DISPATCH VIA NEW PUMPS

16"x8"
16"x8"
PRV
HP | LP
PRV

1 DELETED

1 DELETED

TO EXPORT POINT EXISTING
NEAR PIG LAUNCHER

P-102 D
EXPORT PUMP
EXISTING

P-102 C
EXPORT PUMP
EXISTING

P-101 D
BOOSTER PUMP
EXISTING

P-101 C
BOOSTER PUMP
EXISTING

P-101 B
BOOSTER PUMP
EXISTING

P-101 A
BOOSTER PUMP
EXISTING

P-102 B
EXPORT PUMP
EXISTING

P-102 A
EXPORT PUMP
EXISTING

GENERAL NOTES

1. ALL DIMENSIONS IN MM.

LEGEND

HOLDS

1. ALL THE HOLD PUT HERE.

ISSUED FOR APPROVAL

REV	DATE	DESCRIPTION	CREATED	CHECKED	APPROVED
1	28.10.2026	ISSUED FOR APPROVAL	PC	RBP	YS
0	09.10.2026	ISSUED FOR REVIEW	PC	RBP	YS

PROJECT: NEW CRUDE OIL TANKFARM PUMP HOUSE AT CPF

CLIENT: SUN PETROCHEMICALS PVT. LIMITED

DRAWING TITLE: PFD - NEW PUMP HOUSE

NTS | A0 | EJB-2026-02-030-PRO-DWG-001 | 3 of 3 | Rev. 1

NAVITERA CONSULTANTS PVT. LTD.

707, One Platinum, Plot No. 8, Section 15, CBD Belapur, Navi Mumbai. Pin: 400614
Tel no: +91 2246197507
E-mail : engineering@navitera.org
Web: www.navitera.org

This drawing or document is the property of Navitera and must in no case wholly or partially be copied, shown or given to a third party without the expressed consent of Navitera.

	PROCESS DATASHEET CUM MECHANICAL DATASHEET GEAR PUMP		
DOC. NO.	**EJB-2026-02-030-PRO-PDS-001**	**CLIENT**	**SUN PETROCHEMICALS PVT LTD, KHAMBHAT**
PROJECT NO. :	**EJB-2026-02-030**	**PROJECT**	**NEW CRUDE OIL PUMP HOUSE AT CPF**

TANK BOTTOM RECYCLE PUMP
P-201 A/B

0	12.10.26	ISSUED FOR REVIEW	PC	RBP	VJS
REV.	**DATE**	**PURPOSE**	**BY**	**CHKD.**	**APPD.**

sun Petrochemicals	PDS Cum MDS For Centrifugal Pump		NAVITERA	Rev No.	0
	PROJECT NO: EJB-2026-02-030			Date	10/12/2026
	RFQ NO.: EJB-2026-02-030-MEC-MRS-001			Prep. By	PC
	TAG NO.: P-201A/B			Chkd. By	RBP
DOCUMENT NO: EJB-2026-02-030-PRO-PDS-001	ITEM: TANK BOTTOM RECYCLE PUMP			App. By	VJS

Sr. No.	Description	Units	Specification Requirements	By Vendor
A	**GENERAL**			
1	Equipment		TANK BOTTOM RECYCLE PUMP	
2	Manufacturer / Manufacturer Ref. No.			
3	Tag No.		P-201 A/B	
4	Model			
5	Nos.Reqd. : Main / Standby		1 / 1	
6	Pump Type - Horizontal / Vertical / In- Line		HORIZONTAL	
7	Driver : Main / Standby		ELECT. MOTOR / ELECT. MOTOR	
8	Installation : Indoor / Outdoor		OUTDOOR	
9	Design Specs.		API 610 11th EDITION & GENERAL SPECIFICATION FOR CENTRIFUGAL PUMPS (API)	
B	**FLUID CHARACTERISTICS**			
1	Liquid		EFFLUENT WATER	
2	Pumping Temperature Min. / Norm. / Max.	°C	- / 45 / -	
3	Specific Gravity at Pumping Temp. / Min. / Max.		1	
4	Viscosity at Pumping Temp. / Max. Temp.	cP	1	
5	Vapour Press. At Pumping Temp. / Max. Temp	kg/cm^2a	0.10	
6	Solids : Type / Size (**Note-8**)	- / micron	NA	
7	Concentration (Suspended/Dissolved)	%	NA	
8	Liquid : Corrosive / Hazardous / Flammable		CORROSIVE	
C	**OPERATING CONDITIONS**			
1	Duty : Continuous / Discontinuous		CONTINUOUS	
2	Parallel Operation Yes / No		NO	
3	Capacity : Rated / Minimum / Normal	m^3/hr	45 / - / 45	
4	Suction Press. : Norm. / Min. / Max.	kg/cm^2g	0 / ATM /	
5	Discharge Press. : Normal	kg/cm^2g	8.20	
6	Differential Pressure / Differential Head	kg/cm^2 / m	8.2 / 82	
7	NPSHA / NPSHR	m	8 .2 /	
8	Max. Admissible Pressure at Shut Off	kg/cm^2g	120% of Rated Head	
9	Flow Control : Type (Manual / Automatic)		NA	
10	Range	%	NA	
11	Seal Type		SINGLE MECHANICAL SEAL	
12	Starting Conditions : Pumped Fluid / Water		PUMPED FLUID	
13	Flushing Fluid : **(Note-4)**			
14	Type			
15	Pressure Normal / Design	kg/cm^2g		
16	Temperature	°C		
17	Cooling Fluid : **(Note-1)**			
18	Type			
19	Pressure Normal / Design	kg/cm^2g		
20	Temperature	°C		
21	Pressure Drop (Maximum)	kg/cm^2		
22	Heating Fluid :		NA	
23	Type	-		
24	Pressure Normal / Design	kg/cm^2g		
25	Temperature	°C		
26	Material in contact with Fluid handled		SS316	
D	**PERFORMANCE**			
1	Rated Speed	rpm		
2	No. of Stages / Efficiency	- / %		
3	Rated Absorbed Power / Max. Absorbed Power	kw		
4	Minimum Continuous stable flow (MCSF)	m^3/hr		

Sr. No.	Description	Units	Specification Requirements	By Vendor
5	Impeller Dia. : Rated / Min. / Max.	mm		
6	Head at Shut Off with Rated Impeller	m		
7	Suction Specific Speed			
8	Axial Thrust Balanced By			
9	Noise Level	dB(A) at 1 m	85	

sun Petrochemicals	PDS Cum MDS For Centrifugal Pump		NAVITERA	Rev No.	0
	PROJECT NO: EJB-2026-02-030			Date	10/12/2026
	RFQ NO.: EJB-2026-02-030-MEC-MRS-001			Prep. By	PC
	TAG NO.: P-201A/B			Chkd. By	RBP
DOCUMENT NO: EJB-2026-02-030-PRO-PDS-001	ITEM: TANK BOTTOM RECYCLE PUMP			App. By	VJS

Sr. No.	Description	Units	Specification Requirements	By Vendor
E	**CONSTRUCTION**			
1	Casing Mounting : Centerline / Foot / In - Line		CENTERLINE	
2	Casin Split : Axial / Radial		RADIAL	
3	Casing Type : Single Volute / Double Volute /			
4	Diffuser / Barrel			
5	Casing : Suction Region Designed For MAWP Yes / No		YES	
6	Nozzle Connections :		—	
7	Suction : Size / Rating / Facing / Position	mm / - / -	/ 300# / RF /	
8	Discharge : Size / Rating / Facing / Position	mm / - / -	/ 300# / RF /	
9	Balancing Drum : Size / Rating / Facing / Position		—	
10	Impeller Type : Closed / Semi Open / Open		CLOSED	
11	Overhung / Between Bearings			
12	I Stg. Suction : Single / Double			
13	Casing Wear ring : Suct. & Discharge side		YES / YES	
14	Impeller Wear ring : Suct. & Discharge side		YES / YES	
15	Rotation viewed from Coupling End		CW / CCW	
16	Max. Allowable Working Press. (MAWP)	kg/cm^2g	At 80 °C	
17	Hydrostatic Test Press.	kg/cm^2g		
18	Press. Connections :			
19	Drain (No. / Size / Type)			
20	Vent (No. / Size / Type)			
21	Balance (No. / Size / Type)			
22	Press. Gauge (No. / Size / Type)			
23	Warm-up (No. / Size / Type)		NA	
24	Bearings : Radial / No.			
25	Bearings : Thrust / No.			
26	Lubrication		Ring oil / Splash / Forced	
27	Mechanical Seal :		API 682 Category 2	
28	Make / Code			
29	Flushing API Plan **(Note 3)**			
30	External Flushing Fluid : Flow **(Note-4)**	m^3/hr	NOT AVAILABLE	
31	Quenching Fluid : Condensate/ Water/ Steam		NOT AVAILABLE	
32	Press. / Flow	kg/cm^2g / m^3/hr	—	
33	Flushing / Quenching Piping MOC			
34	Coupling : Type / Make		Flexible /	
35	Model / Spacer Length	mm		
36	Pump Cooling : API Plan		NA	
37	Cooling Water Press. / Flow	kg/cm^2g / m^3/hr	NA	
38	Cooling Water Piping MOC		NA	
39	Pump Heating : Press. / Flow	kg/cm^2g / m^3/hr	NA	
40	Heating Piping Material of Construction		NA	
F	**MATERIAL OF CONSTRUCTION**			
1	Casing / Diffuser	-	As per Material class A-8 of API 610 11th EDITION	
2	Impeller	-		
3	Impeller Wear Rings	-		
4	Casing Wear Rings	-		
5	Shaft	-		
6	Shaft Sleeves	-		
7	Base Plate	-		
8	Drip Tray	-	NA	
9	Coupling / Coupling Guard	-	/ ALUMINIUM	
10	**Weights And Dimensions :**			

	PROCESS DATASHEET CUM MECHANICAL DATASHEET GEAR PUMP		
DOC. NO.	**EJB-2026-02-030-PRO-PDS-002**	**CLIENT**	**SUN PETROCHEMICALS PVT LTD, KHAMBHAT**
PROJECT NO. :	**EJB-2026-02-030**	**PROJECT**	**NEW CRUDE OIL PUMP HOUSE AT CPF**

PUMP HOUSE DRAIN PIT OIL LIFTING PUMP
P-202 A/B

0	12.10.26	ISSUED FOR REVIEW	PC	RBP	VJS
REV.	**DATE**	**PURPOSE**	**BY**	**CHKD.**	**APPD.**

sun Petrochemicals	PDS CUM MDS For Gear Pump		NAVITERA	Rev No.	0
	PROJECT NO:EJB-2026-02-030-MEC-MRS-001			Date	12-10-2026
	RFQ NO.: EJB-2026-02-030-MEC-MRS-001			Prep. By	PC
	TAG NO.: P-202 A/B			Chkd. By	RBP
DOCUMENT NO:	ITEM: PUMP HOUSE DRAIN PIT OIL LIFTING PUMP			App. By	VJS

Sr. No.	Description	Units	Specification Requirements	By Vendor
A	**GENERAL**			
1	Equipment		PUMP HOUSE DRAIN PIT OIL LIFTING PUMP	
2	Manufacturer / Manufacturer Ref. No.			
3	Tag No.		P-202 A/B	
4	Model			
5	Nos.Reqd. : Main / Standby		1 / 1	
6	Pump Type - Horizontal / Vertical / In- Line		HORIZONTAL	
7	Driver : Main / Standby		ELECT. MOTOR / ELECT. MOTOR	
8	Installation : Indoor / Outdoor		OUTDOOR	
9	Design Specs.		API Standard 676, 4th Edition, February 2022	
B	**FLUID CHARACTERISTICS**			
1	Liquid		Crude oil	
2	Pumping Temperature Min. / Norm. / Max.	°C	7 / 20 / 45	
3	Specific Gravity at Pumping Temp. / Min. / Max.		0.815	
4	Viscosity at Pumping Temp. / Max. Temp.	cP	30	
5	Vapour Press. At Pumping Temp. / Max. Temp	kg/cm^2a	0.65	
6	Solids : Type / Size	- / micron	-	
7	Concentration (Suspended/Dissolved)	%	-	
8	Liquid : Corrosive / Hazardous / Flammable		HAZARDOUS	
C	**OPERATING CONDITIONS**			
1	Duty : Continuous / Discontinuous		CONTINUOUS	
2	Parallel Operation Yes / No		NO	
3	Capacity : Rated / Minimum / Normal	m^3/hr	6 / - / 6	
4	Suction Press. : Norm. / Min. / Max.	kg/cm^2g	(1 m Suction lift) / - / -	
5	Discharge Press. : Normal	kg/cm^2g	3	
6	Differential Pressure / Differential Head	kg/cm^2 / m	3 / 38	
7	NPSHA / NPSHR	m	2 /	
8	Max. Admissible Pressure at Shut Off	kg/cm^2g	120% of Rated Head	
9	Flow Control : Type (Manual / Automatic)		NA	
10	Range	%	NA	
11	Seal Type		MECHANICAL SEAL	
12	Starting Conditions : Pumped Fluid / Water		PUMPED FLUID	
13	Flushing Fluid : **(Note-4)**			
14	Type			
15	Pressure Normal / Design	kg/cm^2g		
16	Temperature	°C		
17	Cooling Fluid : **(Note-1)**			
18	Type			
19	Pressure Normal / Design	kg/cm^2g		
20	Temperature	°C		
21	Pressure Drop (Maximum)	kg/cm^2		
22	Heating Fluid :		NA	
23	Type	-		
24	Pressure Normal / Design	kg/cm^2g		
25	Temperature	°C		
26	Material in contact with Fluid handled		CS	
D	**PERFORMANCE**			
1	Rated Speed	rpm		
2	No. of Stages / Efficiency	- / %		
3	Rated Absorbed Power / Max. Absorbed Power	kw		
4	Minimum Continuous stable flow (MCSF)	m^3/hr		
5	Impeller Dia. : Rated / Min. / Max.	mm		
6	Head at Shut Off with Rated Impeller	m		

Sr. No.	Description	Units	Specification Requirements	By Vendor
7	Suction Specific Speed			
8	Axial Thrust Balanced By			
9	Noise Level	dB(A) at 1 m	85	
E	**CONSTRUCTION**			
1	Pump type		Gear Pump	
2	Gear Type		BY VENDOR	
3	Nos. of Teeth in Gear		BY VENDOR	
4	Nozzle Connections :		—	
5	Suction : Size / Rating / Facing / Position	mm / - / -	/ 300# / RF /	
6	Discharge : Size / Rating / Facing / Position	mm / - / -	/ 300# / RF /	
7	Balancing Drum : Size / Rating / Facing / Position		—	
8	Rotation viewed from Coupling End		CW / CCW	
9	Max. Allowable Working Press. (MAWP)	kg/cm^2g	At 80 °C	
10	Hydrostatic Test Press.	kg/cm^2g		
11	Press. Connections :			
12	Drain (No. / Size / Type)			
13	Vent (No. / Size / Type)			
14	Balance (No. / Size / Type)			
15	Press. Gauge (No. / Size / Type)			
16	Warm-up (No. / Size / Type)		NA	
17	Bearings : Radial / No.			
18	Bearings : Thrust / No.			
19	Lubrication		Ring oil / Splash / Forced	
20	Mechanical Seal :		API 682 Category 2	
21	Make / Code			
22	Flushing API Plan **(Note 3)**			
23	External Flushing Fluid : Flow **(Note-4)**	m^3/hr	NOT AVAILABLE	
24	Quenching Fluid : Condensate/ Water/ Steam		NOT AVAILABLE	
25	Press. / Flow	kg/cm^2g / m^3/hr	—	
26	Flushing / Quenching Piping MOC			
27	Coupling : Type / Make		Flexible /	
28	Model / Spacer Length	mm		
29	Pump Cooling : API Plan		NA	
30	Cooling Water Press. / Flow	kg/cm^2g / m^3/hr	NA	
31	Cooling Water Piping MOC		NA	
32	Pump Heating : Press. / Flow	kg/cm^2g / m^3/hr	NA	
33	Heating Piping Material of Construction		NA	
34	Priming Pot Material of Construction			
35	Internal Safety Valve		Yes	
F	**MATERIAL OF CONSTRUCTION**			
1	Casing	-	CS	
2	Gear MOC	-	CS	
3	Shaft	-	CS	
4	Shaft Sleeves	-	SS 410	
5	Base Plate	-	CS	
6	Drip Tray	-	NA	
7	Gasket and O - Rings	-		
8	Bushing /Bearing	-		
9	Coupling / Coupling Guard	-	/ ALUMINIUM	
10	Priming Pot	-		
11	**Weights And Dimensions :**			
12	Pump / Base Plate / Driver	kg		
13	Dimensions L x W x H	mm		

sun Petrochemicals	PDS CUM MDS For Gear Pump		NAVITERA	Rev No.	0
	PROJECT NO:EJB-2026-02-030-MEC-MRS-001			Date	12-10-2026
	RFQ NO.: EJB-2026-02-030-MEC-MRS-001			Prep. By	PC
	TAG NO.: P-202 A/B			Chkd. By	RBP
DOCUMENT NO:	ITEM: PUMP HOUSE DRAIN PIT OIL LIFTING PUMP			App. By	VJS

Sr. No.	Description	Units	Specification Requirements	By Vendor
14	**Inspection And Tests : As per General Specification for Centrifugal Pumps (API)**		WITNESSED BY CLIENT / 3RD PARTY	
15	Performance Test		Witnessed / ~~Non Witnessed~~	
16	Hydrostatic Test		Witnessed / ~~Non Witnessed~~	
17	NPSH Test		Witnessed / ~~Non Witnessed~~	
18	Disassembly after performance test		Witnessed / ~~Non Witnessed~~	
19	**Driver Data :**			
20	Type		Electric Motor (FLP)	
21	Manufacturer		CGL / BBL / LHP	
22	Rated Power **(Note-2)**	kw		
23	Speed	rpm		
24	Power : Volts / Phase / Frequency	V / Ph. / Hz	415 / 3PH / 50	
25	Area classification		Zone-1, Gas group-IIA/IIB, Temp. class-T3, Enclosure-Ex"d", IP 55	
G	**SCOPE OF SUPPLY**			
1	Common Base Plate For Pump & Driver		BY VENDOR	
2	Coupling With Spacer		BY VENDOR	
3	Coupling Guard (Non Sparking)		BY VENDOR	
4	Casing Drains With Valves		BY VENDOR	
5	Casing Vents With Valves		BY VENDOR	
6	Mechanical Seal with accessories		BY VENDOR	
7	Seal Flushing & Quenching Piping		BY VENDOR	
8	Cooling Water & Heating Piping		NA	
9	Companion Flanges (Suction & Discharge)		BY VENDOR (FOR NON STD. SIZES)	
10	With Nuts,Bolts & Gaskets			
11	Driver - As per Enclosed Electrical Specification		BY VENDOR	
12	Driver Fixing Bolts With Shims		BY VENDOR	
13	Priming Pot		BY VENDOR	
14	Priming Pot mounting provision on pump Baseplate		YES	
15	Pump Base Plate Foundation Bolts		BY VENDOR	
16	Drip Tray Under Stuffing Box		NO	
17	Special Tools & Wrenches		BY VENDOR	
18	Shop Tests - As per General Specification for Centrifugal Pumps (API)		BY VENDOR	
19	Painting - As per Specification SUNPETRO/QPS/SC/001		BY VENDOR	
20	Supervision during erection and commissioning		BY VENDOR	
21	Drawings & Documents		As per Appendix-1 of General Specification for Centrifugal Pumps (API)	
22	Spare Parts For Comissioning		As per Doc. No. 1019-MC-GEN-008	
23	Spare Parts For 2 Year's Operations		As per Doc. No. 1019-MC-GEN-008	
24	Pump - Driver Assembly At Shop		BY VENDOR	

Note

Note-1: No cooling utility is available at site.

Note-2: Motor rating to be selected considering pump power required at end of curve.

Note-3: Mechanical seal manufacturer recommendation to be submitted with offer.

Note-4: No external flushing/quenching fluid is available for mechanical seal.

Note-5: Pump will be installed above underground pit. Suction lift = 1 m.

Note-6: Vendor to provide NPSHr, efficiency, pump characteristic curve and GA drawing.

Note-7: Vendor to provide performance guarantee for capacity, differential head and absorbed power.

Note-8: Vendor to select end of curve motor for the pump.

Note-9: Maximum and minimum operating temperature to be considered as 45°C and 7°C respectively.

Note-10: Vendor to suggest solution to avoid pump damage at flow rate below mcsf.

	Data sheet for LV FLP Motor	SHEET No. 1 OF 2
DOC. NO. : EJB-2026-02-030-ELE-DS-001	CLIENT : SUN PETROCHEMICALS PVT LTD, KHAMBHAT	
PROJECT NO. : EJB-2026-02-030	PROJECT : NEW CRUDE OIL PUMP HOUSE AT CPF	

Data sheet for LV FLP Motor

REV	DATE	PURPOSE	BY	CHECKED	APPR.
0	12.10.2026	ISSUED FOR REVIEW	PC	RBP	VJS

		Data sheet for LV FLP Motor	
DOC. NO. : EJB-2026-02-030-ELE-DS-001		**CLIENT : SUN PETROCHEMICALS PVT LTD, KHAMBHAT**	**SHEET NO:** 2 OF 2
PROJECT NO. : EJB-2026-02-030		**PROJECT : NEW CRUDE OIL PUMP HOUSE AT CPF**	**REV. NO : 0**
Sr. No.	**Description**	**Specifications**	**Remarks**
A	**APPLICABLE STANDARDS**		
1	Flameproof Enclosure	IS 5571	
2	Performance, Testing	IS 12615, BS 5000 (PART 10)	
3	Dimension, Foot	IS 1231	
4	Dimension, Flanges	IS 2223	
5	Noise level	IS 12065	
6	Vibration	IS 12075	
7	Recommended practices on Static electricity	OISD-RP-110	
8	Classification of areas for Electrical installations at Hydrocarbon processing and handling facilities	OISD - STD - 113	
9	Design aspects for safety in electrical systems	OISD-RP-149	
B	**STANDARD SPECIFICATIONS**		
1	Voltage, V	415 +/-10%	
2	Frequency, Hz	50 +/- 3%	
3	Insulation	Class F, temperature rise limited to class B	
4	Duty	Continuous, S1	
5	Temperature class	T3	
6	Degree of protection	IP 55	
7	Ambient temperature	50° C	
8	Temperature rise above ambient temperature	70° C	
9	Paint	Epoxy / PU anti corrosive paint. Paint thickness shall be min. 130 micron	
10	Additional requirement	Body, Fan, Terminal box - CI	
11	Vacuum Pressure Impregnated	Required	
12	Epoxy Gel Coat	Required	
13	Efficiency	IE3	
C	**APPROVAL REQUIRE**		
	For FLP motors		
1	CMRI, Dhanbad	Required	
2	CCE, Nagpur	Required	
D	**OTHER DETAILS FOR ORDERING**		
1	Motor HP/ KW	VTP	
2	Qty.	VTP	
3	Motor RPM/ Poles	VTP	
4	Application of motor	Reactor/ Pump/ Centrifuge/ Conveyors/Compressor/ Others	

		Data sheet for LV FLP Motor	
DOC. NO. : EJB-2026-02-030-ELE-DS-001		**CLIENT : SUN PETROCHEMICALS PVT LTD, KHAMBHAT**	**SHEET NO:** 2 OF 2
PROJECT NO. : EJB-2026-02-030		**PROJECT : NEW CRUDE OIL PUMP HOUSE AT CPF**	**REV. NO : 0**
Sr. No.	**Description**	**Specifications**	**Remarks**
5	Hazardous area classification		During detail engineering
6	Load torque chara.	Variable / constant.	
7	Frame size	Vendor to specify	
8	Enclosure gas group		During detail engineering
9	Type of motor	FLP Ex "d" TEFC induction Motor	
10	Type of rotor	Squirrel cage	
11	Mounting	Horizontal foot/ Horizontal flange/Vertical foot/vertical flange	
12	Method of starting	DOL/ STAR / DELTA / VFD	
13	VFD motor	VFD driven motors shall be suitable for the associated harmonics and lesser cooling as a consequence of speed variations.	
14	Type of coupling	Vendor to provide	
15	Cable size/ Type		
16	Accessories (Thermistor, space heater etc.)	Motors, rating 30 kw & above shall be with space heater.	
17	Fan cover, Terminal box	Metallic non corrosive type terminal box. Fan shall be with LM6/ CI MOC, dynamically balanced	
E	**ELECTRICAL PERFORMANCE**		
1	FULL LOAD CURRENT (A)	VTP	
2	FULL LOAD SPEED (RPM)	VTP	
3	EFFICIENCY (%)	VTP	
4	POWER FACTOR	VTP	
5	AMB / TEMP RISE BY RES.(° C)	VTP	
6	RATED FULL LOAD TORQUE (FLT)	VTP	
7	STARTING TORQUE (% of FLT)	VTP	
8	PULL OUT TORQUE (% of FLT)	VTP	
9	STARTING CURRENT (% of FLC)	VTP	
10	NO OF START / HOUR	2 HOT / 3 COLD / 4 EQUALLY SPREAD	
11	STARTING TIME	VTP	
12	THERMAL WITH STAND TIME	VTP	
F	**DRAWINGS / DOCUMENTS REQUIRED**	Motor routine test certificate, Manual & GA drgs.	

SURFACE COATING

CONTENT

No	Description	Page No
1	Scope	1
2	Code & Standard	3
3	General	6
4	Coating System	9
5	Paint Storage	10
6	Surface Preparation	10
7	Pre-Construction Primer	15
8	Paint Application	15
9	Hot Deep Galvanizing	20
10	Inspection	22
11	Inspection Record	25
12	Repair & Damage	26
13	Site Painting	27
14	Colour Schedule	27
15	Coating System	29 - 38
16	Colour Standard	40

1.1 SCOPE

This specification defines the minimum requirements for the surface preparation, material, supply and application of paints and coatings for CPF Steel structures, Piping, Vessels, Equipment and accessories.

The instructions contained herein also covers the requirements for Quality Assurance and Quality Control together with guaranteed performances.

1.2 ABBREVIATIONS

ANSI	American National Standards Institute
API	American Petroleum Institute
ASME	American Society of Mechanical Engineers
ASTM	American Society for Testing and Materials
AWS	American Welding Society
BS	British Standard
DFT	Dry Film Thickness
°C	Degrees Celsius
HSE	Health Safety and Environment
ISO	International Standards Organisation
NACE	National Association of Corrosion Engineers
RAL	European Colour Standard (See tables in Appendix B and C)
SSPC	Steel Structures Painting Council
WHP	Well Head Platform

2.0 CODES AND STANDARDS

All surface preparation painting and corrosion protection shall be in accordance with the latest edition of the following codes and standards.

AMERICAN WELDING SOCIETY (AWS)

AWS C2.18	Guide For the Protection of Steel with Thermal Sprayed Coatings of Aluminium and Zinc and their alloys and composites.

AMERICAN SOCIETY FOR TESTING AND MATERIALS (ASTM)

ASTM A90	Test Method for Weight of Coating on Zinc-Coated (Galvanised) Iron and Steel Articles
ASTM A123/ A123M	Specification for Zinc (Hit-dip Galvanised) Coatings on Iron and Steel Products
ASTM A143	Recommended Practice for Safe-guarding against Embrittlement of Hot-Dipped Galvanised Structural Steel Products and Procedure for Detecting Embrittlement
ASTM A153/ A153M	Specification for Zinc Coating (Hot-Dip) on Iron and steel Hardware
ASTM A384/ A384M	Standard Practice for Safeguarding Against Warpage and Distortion during Hot-Dip Galvanising of Steel Assemblies.
ASTM A385	Practice for Providing High-Quality Zinc Coatings (Hot-Dip)
ASTM D823	Method of Producing films of uniform thickness of Paint, varnish lacquer and released products on test panels.
ASTM D1200	Test method for viscosity of paints, varnishes and lacquers by ford viscosity cup.
ASTM D3359	Method of measuring adhesion by tape test
ASTM D4541	Test method for pull-off strength of coatings using portable adhesion testers.

ASTM D4940	Test method for conducting metric analysis of water-soluble ionic contamination of blasting abrasives.
ASTM D4285	Test method for indicating oil or water in compressed air.
ASTM D5064	Practice for conducting a patch test to assess coating compatibility.
ASTM E376	Practice for measuring coating thickness by magnetic field or Eddy-Current (Electro-magnetic) test methods.

NATIONAL ASSOCIATION OF CORROSION ENGINEERS (NACE)

RP-01-76	Recommended Practice Corrosion Control of Steel, Fixed Offshore Platforms Associated with Petroleum Production
RP-01-88	Recommended Practice for discontinuity (holiday) testing of Protective Coatings.
RP-02-87	Field measurement of Surface profiles using Replica Tape

STEEL STRUCTURES PAINTING COUNCIL (SSPC)

SSPC-PA 1	Shop, Field and Maintenance Painting of Steel
SSPC-PA 2	Measurement of Dry Coating Thickness with Magnetic Gauges
SSPC-SP 1	Surface Preparation No. 1 Solvent Cleaning
SSPC-SP 2	Surface Preparation No. 2 Hand Tool Cleaning
SSPC-SP 3	Surface Preparation No. 3 Power Tool Cleaning
SSPC-SP-5/NACE	Surface Preparation No. 1 White Metal Blast Cleaning

SSPC-SP-7/NACE	Surface Preparation No. 4 Brush Off Blast Cleaning
SSPC-SP-10/NACE	Surface Preparation No. 2 Near White Metal Blast Cleaning

INTERNATIONAL STANDARDS ORGANISATION(ISO) 8501-1

SA2½	Surface Preparation – Near White Metal Blast Cleaning

2.1 MANUFACTURER'S STANDARDS

Paint manufacturer's data sheets, application instructions and safety precautions shall be considered part of this specification.

3.0 GENERAL

3.1 SURFACES EXCLUDED FROM ABRASIVE BLASTING AND PAINTING

The following surfaces shall not be abrasive blasted or painted.

- All surfaces made from non-ferrous materials (Nickel, Monel, Brass, Bronze)
- Instrument tubing including fusible plugs and tubing used in the ESD system.
- Fibreglass, plastic, or plastic-coated material not susceptible to ultra violet deterioration.
- Stainless steel instrument cases and process control panels.
- Nameplates, machined surfaces, instrument glass, flange faces, control valve stems and similar items.
- Stainless steel process piping and vessels (unless specifically required).
- Electrical conduit, breathers and drain fittings.
- Machined and threaded surfaces shall be protected with suitable rust preventive.
- Flange gasket facing.

If stainless steel is connected to carbon steel, the carbon steel part shall be coated 50 mm beyond the weld zone on to the stainless steel. The coating for stainless steel part shall not contain metallic Zinc and shall be free from chlorides.

3.2 MANUFACTURED ITEMS

a) Manufactured items such as valves, level gauges and equipment shall be coated in accordance with this specification.

b) If manufacturer's paint system is not in accordance with this specification, Seller shall blast and repaint the item in accordance with this specification. Only the Buyer may waive this condition and this shall be obtained in writing prior to commencement of works.

3.3 SURFACES IN CONTACT

a) Surfaces of components in contact (bottom of skids, mounting surfaces of equipment, pipe supports, brackets, bolt holes, etc.) shall be painted.

b) Surfaces in contact shall receive a minimum of one coat of primer prior to assembly (unless instructed otherwise by Buyer).

c) Paints containing Zinc or Aluminium metal or free chlorides shall not be used on Stainless steel.

d) When zinc rich primers are used, care shall be taken to avoid any possibility of over spraying onto Duplex or Austenitic stainless steel, Nickel alloy steel components.

3.4 ENVIRONMENTAL CRITERIA

a) Blasting shall be performed during dry weather.
b) Dry blast cleaning operations shall not be conducted on surfaces that are exposed to rain, water spray, or any other moisture.
c) Surfaces shall not be coated in rain, wind, snow, fog, mist, dust, or in areas where injurious airborne elements exist.
d) Unless otherwise authorised by Buyer, coating shall be applied only if all the following conditions exist:
    - Air temperature 10ºC above dew point.
    - Surface temperature at least 3ºC above dew point.
    - Relative humidity is below 85%.
    - Any other conditions as recommended by coating manufacturer.
e) Painted surfaces upon which it rains prior to the paint being rainproof shall be re-blasted and repainted.

3.5 TIME CRITERIA

a) Blasting shall be performed during daylight hours.
b) Blast cleaned surfaces shall be coated with primer within 4 hours, prior to sundown of the same day, and before any rusting occurs.
c) Coatings shall be applied only during daylight hours.

3.6 POST-PREPARATION

Nameplates, manufacturer's identification tags, instrument glass, finished flange faces, control valve stems, and similar items shall be cleaned, restored to their original condition, and reattached.

4.0 COATING SYSTEMS

a) All equipment coatings must meet the requirements of this specification and be suitable for use in a coastal onshore environment.

b) The type, brand, number of coats, and colour shall be as specified in the Table. A (Appendix A) and where temperatures shown shall be deemed to be maximum operating temperatures. Colour shall be as specified in Table B-1 (Appendix B) or Table C.1 (Appendix C).

c) One manufacturer shall supply the products for each system.

d) Buyer shall approve selection of products in writing.

e) Only originally sealed intact, identified and undamaged manufacturer's containers shall be used. Any container exhibiting leakage or excess skinning or hard setting shall be discarded.

f) The lead content of inorganic zinc silicates shall not exceed 0.05%.

g) Organic coatings, excluding silicone and silicone acrylic, shall be lead and chromate free and VOC compliant.

h) All insulated pipes shall be fully painted prior to fitting insulation.

5.0 PAINT STORAGE

5.1 FIRE AND SAFETY

Storage areas shall not constitute a potential fire hazard to the work.

5.2 TEMPERATURE

Paint, thinners, and associated materials shall be kept in fully enclosed, ventilated storage room(s) within the temperature limits and time restraints for storage specified in manufacturer's product data sheets.

5.3 REJECTION

Coating materials that have jelled or otherwise deteriorated during storage shall not be used.

6.0 SURFACE PREPARATION

6.1 PRE-BLAST PREPARATION/PROTECTION

6.1.1 Steel Surfaces

a) Welding flux in crevices shall be removed.

b) Burrs, weld splatter, slivers, mill scale, indentations, and other sharp surface projections shall be ground smooth prior to further surface preparation.

c) Bolt holes shall be drilled and reamed before blast cleaning.

6.1.2 Electrical/Instrumentation

a) Local mounted instruments, gauges, nameplates, control valve stems, controllers, code stamps, etc., shall be protected to prevent damage during blasting and painting.

b) Where practical, electrical cable shall be installed after blasting. If not adequate cover shall be provided over the cables to protect them.

c) Nameplates that are attached in a manner that allows corrosion to occur behind the nameplate shall be removed prior to abrasive blasting and painting and reattached after painting is complete.

d) Surfaces of adjacent equipment and piping shall be protected from the blasting media.

6.1.3 Mechanical, Piping and Fittings

a) Flanged valves and any other items that can not be effectively sand blasted and primed after assembly shall be blasted and primed separately prior to assembly. Mating surfaces and threads shall be carefully protected from blasting.

b) Machined and threaded surfaces shall be protected from damage caused by the blasting medium.

6.1.4 General Clean-up

a) Before the start of abrasive blasting, oil and/or grease contamination shall be removed in accordance with SSPC-SP 1.

b) Acid washes or other cleaning solutions or solvents shall not be used on metal surfaces after being abrasive blasted. This includes any inhibitive washes intended to prevent rusting.

c) Dirt, scale, or other surface contaminants shall be removed prior to the start of abrasive blasting.

6.2 ABRASIVE BLASTING

6.2.1 General

a) Abrasive blasting shall be performed in an area away from painting operations and freshly coated surfaces.
b) Abrasive blasting shall be performed using Buyer approved equipment.

6.2.2 Blasting Equipment

a) Air compressors shall supply a continuous volume of air to each blast nozzle with adequate pressure and volume to achieve the required surface profile.

b) The compressed air supply shall be provided with dryers and oil mist extractors to keep the air supply dry and oil free.

c) The cleanliness of the compressed air shall be verified to standard ASTM D-4285, at the beginning of each shift by blowing air without abrasives or coating onto a clean white cloth. If oil or water appears on the cloth, all traps and separators shall be blown down until subsequent white cloth tests show no water or oil.

6.2.3 Abrasive

a) Unless specifically approved in advance by Buyer, the abrasive shall be mineral slag or a metal shot/grit mixture. Silica sand shall not be used.

b) The maximum particle size shall be no larger than that passing a No. 16 wire mesh screen and shall be capable of producing the desired anchor profile in the material.

c) Abrasive material containing any oil, moisture, or impurities (particularly salt or organic material) or inclusions of any kind shall not be used. It shall contain no more than 100ppm of chloride (Na). Flash rust 15 minutes after blasting indicates excessive salt presence, the surface shall be fresh water cleaned then re-blasted using abrasive material meeting the requirements.

Blasting Operations

The use of centrifugal wheels to propel the abrasive, or machine shot blasting, shall be acceptable only if the Seller/sub seller can demonstrate that an anchor pattern with the required surface profile is being produced.

6.2.4 Blast Cleaned Surface Requirements

a) Abrasive blasted surface profiles in accordance with SSPC-SP-10(Sa 2½) shall be measured using replica tape in accordance with NACE RP-02-87. Surface profiles shall follow Appendix-A coating systems. Profile measurements for abrasive blast cleaned surfaces can also be made with a Keane Tator Profile comparator, Clemtec anchor profile chips, Testex Press-O-Film or other Buyer approved method.

Prior to any coating application the substrate shall be checked for soluble salt contamination using a suitable method and the contamination shall not exceed 5µgm/cm^2. Surfaces that do not meet these criteria shall be reprocessed.

Should this problem occur on a frequent basis the abrasive medium shall be re-examined for quality and if necessary changed.

b) Galvanised and aluminium surfaces shall be degreased and zinc salts removed by steam cleaning prior to surface preparation in accordance with SSPC-SP 7 (Sa 1).

c) Stainless steel surfaces shall be thoroughly degreased and all contaminants removed prior to surface preparation in accordance with SSPC-SP-7. In no case steel abrasives or steel brushes shall be used for this operation.

d) Abrasive blasted surfaces shall be rendered dust free by “blow-off” with compressed air or vacuum cleaning prior to the application of primer.

e) A minimum of 100mm around the edges of abrasive blasted areas shall be left bare unless adjoining a newly coated surface. If adjoining a coated surface, blasting shall continue to a minimum of 50mm into the coated surface.

6.3 SURFACES WHICH CANNOT BE ABRASIVE BLASTED

a) Surfaces which cannot be abrasive blasted shall be degreased by steam cleaning prior to surface preparation in accordance with SSPC-SP 3 with the prior approval of the Buyer.

b) Care shall be taken not to burnish the metal surface.

c) Rough edges shall be feathered.

7.0 PRE-CONSTRUCTION PRIMERS

Pre-construction primers may be used. The brand and generic type shall be submitted to the Buyer for prior approval. For equipment that has received shop prime coat, the field coating Seller shall touch-up prime coat and apply additional coats in accordance with the coating schedule. It is the Seller's responsibility to confirm the compatibility between shop and field applied painting systems with reference to the available documents. In case of any conflict, Buyer shall be contacted for resolution.

Use of Pre-construction primer or shop primer as an integral part of final coating system shall only be considered when there is a documented evidence that the surface preparation and the primer applied meets the requirement of the painting system.

8.0 PAINT APPLICATION

8.1 GENERAL

a) The Seller shall comply with all applicable requirements of the paint manufacturer's specifications regarding surface preparation, paint storage, handling, mixing, safety, application, curing, inspection and testing. The Seller shall

have coating manufacturers coating system data sheet (CSDS) for each coating system to be used, containing at least the following information for each product:

- Surface pre-treatment requirements
- Film thickness (max, min and specified)
- Maximum and minimum recoating intervals at relevant temperatures
- Information on thinners to be used (quantities and type)
- Coating repair system

b) Precaution shall be taken to prevent coating from being applied to equipment nameplates, instrument glasses and gauge dials, couplings, shafts, flange and nozzle faces, valve stems, bearing and other machined surfaces.

c) All equipment components shall be in the fully painted condition prior to final assembly. Any damage due to mechanical handling shall be repaired by Seller/Sub-seller as per the paint manufacturer's specifications with the new coating overlapping the undamaged coatings surrounding the repair area.

8.2 PAINT PREPARATION

Coatings and primers shall be delivered to the jobsite in the original containers bearing the Manufacturer's name, product designation, batch number, shelf life and date of manufacture. Materials which have exceeded the Manufacturer's recommended shelf life shall not be used. Materials shall be used on a first in, first out basis.

8.2.1 Mixing

a) Before use, coating ingredients in any container shall be thoroughly mixed by power-driven mixers to a smooth and uniform consistency for a minimum of 5 minutes. Hand mixing using paddles shall not be permitted. For two (2) component systems, the catalyst and the coating shall be thoroughly mixed after the catalyst has been added to the coating.

b) Coating material mixed in the original container shall not be used until all settled pigment is incorporated in the vehicle. This does not imply that part of the vehicle may not be poured off temporarily to simplify the mixing.

c) Material which does not have a limited pot life, or does not deteriorate on standing, may be mixed any time before using. If settling has occurred, material shall not remain in spray pots or buckets overnight but shall be gathered into a closed container and re-mixed before use.

8.2.2 Thinning

a) Thinner shall not be added unless necessary for proper application.

b) Thinning shall not exceed the limitations established by manufacturer.

c) The thinner shall be as stated on the manufacturer’s product specification sheets.

d) The manufacturer of the coating materials in which it is used shall supply thinner.

e) When use of thinner is permissible, it shall be added during the mixing process. Painters shall not add thinner after paint has been thinned to the proper consistency.

f) Thinning shall be done under supervision acquainted with the correct amount and type to be added.

8.2.3 General Application Techniques

a) Prior to the application of any coat of material, damage to previous coats shall be touched up. Edges of existing coating shall be feathered towards the substrate prior to over coating.

b) Coating shall not be placed on edges prepared for field welds or within 100mm of these edges.

c) Painting shall not be allowed over abrasive blasted areas less than 100 mm away from the un-blasted area.

d) Each coat shall be uniformly applied as a continuous film of uniform thickness free of pores, skips, sags, and drips. Holidays in the final coat at edges, corners, welds, and inaccessible areas shall be protected by hand brushing with an additional layer of finish coat to meet the specified thickness.

e) Each coat shall be in a proper state of cure or dryness before the application of the succeeding coat. Material shall be considered dry for recoating when an additional coat can be applied without the development of any detrimental film irregularities, such as lifting or loss of adhesion of the undercoat, and after the manufacturer's minimum recommended drying time has elapsed

f) The intermediate coat colours shall be distinctly different from the topcoats. Successive coats of paint shall be applied by cross-hatching the previous coat.

g) Painters shall be equipped with wet mil gauges and each painter shall make frequent checks of wet film thickness.

8.2.4 Air Spray Equipment

a) The equipment shall be kept in satisfactory condition for proper paint application.

b) The air from the spray gun impinging against the surface shall show no condensed water or oil.

c) Spray equipment shall be kept sufficiently clean so that dirt, dried paint, and other foreign materials are not deposited in the paint film.

d) Prior to use, equipment shall be purged with thinner compatible with product to be sprayed.

e) Traps or separators shall be installed between the air source and the spray equipment to remove oil and condensed water from the air.

f) Traps or separators shall be of adequate size and the drain valves shall be opened slightly to permit continuous draining of condensate during operations.

8.2.5 Brush Application

a) Coatings shall be brushed on all areas which cannot be properly spray coated for any reason.

b) Brushing shall be done so that a smooth coat as nearly uniform in thickness as possible is obtained.

c) Paint shall be worked into all corners and crevices.

d) Runs or sags shall be brushed out.

e) Successive coats of paint shall be applied by cross-hatching the previous coat.

8.3 DRYING OF COATED SURFACES

8.3.1 Forced Drying

Paint shall not be force dried under conditions which cause cracking, wrinkling, blistering, formation of pores, or detrimentally affect the condition of the paint.

8.3.2 Dryer Compounds/Accelerators

Dryer compounds or accelerators shall not be added to paint unless specifically called for in the manufacturer's specification for the paint.

9.0 HOT-DIP GALVANIZING

9.1 SPECIFICATIONS

9.1.1 Miscellaneous Steel Products

a) Gratings and other items so specified on the Contract drawings shall be hot dip galvanised in accordance with ASTM A123 and ASTM A384.

b) Hot dip galvanising shall provide a minimum zinc deposit of 2.5 ounces/ft² of surface.

c) Hot dip galvanising of bolts, nuts and washers shall conform with ASTM A153 and ASTM A143. Note: Bolts and nuts for piping are PTFE coated.

9.2 PROCEDURES

9.2.1 Galvanised Connections

a) Items to be galvanised shall be galvanised after fabrication.

b) Where it is impossible to galvanise a completely fabricated unit, joints that must be welded after galvanising shall have the welds metalized after assembly of the unit with Buyer approved procedure.

9.2.2 Painted Connections

a) Galvanized members that are to be permanently fixed to the structure by welding shall be attached after the supporting members are primed but before topcoats are applied.

b) The weld and heat-affected zone shall be cleaned of all welding flux, blasted, and coated as per Appendix A.

9.2.3 Repair

a) Galvanized surfaces that require welding, cutting, drilling, or other preparation and any galvanized surface that has been damaged shall be repaired with Buyer approved coating repair system.

b) Rust and surface contaminants shall be removed in accordance with SSPC-SP 3. The area shall then be cleaned by solvent washing.

c) Coating material shall be applied immediately after completion of surface preparation.

10.0 INSPECTION AND TESTING

a) As a minimum, all surface preparation and coating application work performed shall be inspected as described in Table 11-1. The results of all the tests shall be recorded in a Daily Inspection Report. The proposed Daily Inspection Reports shall be submitted for Buyer approval.

b) All parts of the work shall be accessible to Buyer / Buyer's representative.

c) The Buyer/Buyer's representative shall at all times have the right to inspect any tools, materials, or equipment used or to be used in the performance of the coating application.

d) The Buyer/Buyer's representative shall have the right to reject any and all equipment or work which does not conform to the specifications.

e) Any defective work or work not conforming to this specification shall be repaired by Seller/ Sub-Seller at no additional time or cost to the Buyer.

MINIMUM INSPECTION AND TESTING REQUIREMENTS

Test Type	Method	Frequency	Acceptance Criteria	Consequence
Environmental conditions	Ambient and steel temperature Relative humidity Dew point	Before start of each shift + Twice per shift	In accordance to specified requirements, sec. 3.4	No blasting or coating
Visual examination	Visual for sharp edges and weld spatter, slivers, rustgrade, etc.	100% of all surfaces	No defects Specific requirements sec. 7.0	Defects to be repaired
Cleanliness	a) ISO 8501-1 b) ISO 8502-3	a) 100% visual of all surfaces b) Spot checks	a) In accordance with specified requirements, sec. 7.0 b) Max. quantity and size rating 2	a) Re-blasting b) Re-cleaning and re-testing until acceptable
Salt test	ISO 8502-6 or equivalent	Spot checks	Max conductivity corresponding to 20mg/m^2 NaCl	Re-cleaning and re-testing until acceptable
Surface profile	Comparator or Stylus Instrument (ISO 8503)	Each component or once per 10m^2	As specified, sec. 7.2	Re-blasting
Visual examination of coating	Visual to determine	100% of surface after each coat	According to specified requirements,	Repair of defects

Test Type	Method	Frequency	Acceptance Criteria	Consequence
	• Curing • Contamination • Solvent retention • Pinholes / popping • Sagging • Surface defects		sec. 13.0 and 14.0	
Holiday detection	NACE RP0188 Voltage, ref table 1	100% of surface after final coat or as required	No holidays	Repair and re-testing
Film thickness	SSPC-PA 2 calibration on smooth surface	SSPC-PA 2	SSPC-PA 2 and coating system data sheet	Repair, additional coats or re-coating as appropriate
Adhesion	ISO 4624 using pneumatic or hydraulic equipment	Spot checks	Ref. notes below	Coating to be rejected
Chloride content of abrasive material	To be provided by Sub-Contractor and approved by Contractor and Company		< 100 parts per million chloride by weight	To be provided by Sub-Contractor and approved by Contractor
Cathodic Disbondment	Part of prequalification of coating, according to ASTM G8, duration 30 days		Max disbonding 10 mm	Coating to be rejected

Note:

<u>Daily Inspection Report</u>

A Daily Inspection Report shall be maintained by the Seller.

<u>Environmental Conditions</u>

Prior to commencement of any surface preparation and coating application the steel temperature, ambient temperature, dew point and relative humidity shall be measured and recorded on the Seller's Daily Inspection Report. A psychrometer shall be used to determine the relative humidity.

<u>Surface Cleanliness and Surface Profile</u>

These assessments shall be carried out at random locations over the whole structure to provide an accurate assessment of the surface cleanliness and the surface profile. The results shall be recorded on the Seller's Daily Inspection Report.

<u>Adhesion</u>

Absolute minimum value is 5.0 MPa, unless otherwise agreed with Buyer.

11.0 INSPECTION RECORDS AND REPORTS

The Buyer shall have the right to inspect the paintwork at all stages of preparation and to reject any tools, instruments, materials, equipment or work that do not conform to this specification.

a) As a minimum requirement for each system the following aspects of the work shall be documented and recorded on the Coating Inspection Report:

- General

- Names of the Seller and the responsible personnel.
- Dates when work was carried out.

- Materials Preparation
  - Equipment and techniques used.
  - Materials receipt condition.
  - Type and calibration of instruments used.

- Environmental Conditions
  - Weather and ambient conditions.
  - Painting periods

- Surface Preparation
  - Condition of surface before preparation.
  - Tools and methods used to prepare surface.
  - Condition after preparation.
  - Surface contamination test results.
- Paints and Painting
  - Condition of surface before paint application.
  - Information on systems being applied.
  - Mixing and testing prior to application.
  - Paint application techniques.

- Testing
  - Type of quality control checks carried out, and results.
  - Compliance or otherwise with specification.

12.0 REPAIR OF DAMAGE TO SHOP PAINT

a) Where shop paint has been damaged in handling, damaged and loosely adhering paint shall be removed and the surface thoroughly cleaned by blasting wherever possible or by power tools if conditions do not permit blasting.

b) Edges of the breaks shall be feathered using sandpaper or emery cloth and the designated number of prime and finish coats applied.

c) Damaged to the finish coating prior to delivery shall be repaired and refinished.

13.0 SITE PAINTING AND REPAIR

a) The type, number of coats, and thickness of coatings shall be as specified in Appendix A.

b) The installation Seller shall touch up coatings that have been damaged during transport and installation.

c) Minor coating repairs made necessary as a result of normal installation procedures, i.e., removal of installation aid and sling damage, etc., shall be performed in accordance with Section 13.0

d) Installation Seller shall paint structural and piping interface connection areas.

e) Surface preparation of the structural and piping interface connection areas shall be in accordance with Section 7.0 of this specification.

14.0 COLOUR STANDARD SCHEDULE

a) The Buyer colour-coding standard (if any) takes precedence, otherwise the following colour schedule shall be followed.

- The final coat colours of all equipment piping and structural shall be as defined in Appendix B.

- Process piping shall be identified with two inches wide colour bands of suitable material at each side of a deck/wall penetration, close to equipment or where it is necessary to identify a piping system as Appendix C.

COATING SYSTEMS

SYSTEM NO. 1	APPLICATION	DFT (MICRONS)
Area	**Onshore plant steel structures, ladders etc.**	
Surface Preparation	Solvent de-grease, near white metal blast (SSPC-SP10) with 25 – 50 microns surface profile	
Primer Coat	One coat Zinc rich epoxy primer	50 – 75
Intermediate Coat	One coat polyamide cure high build epoxy	150 – 200
Finish Coat	1 coat Aliphatic Polyurethane	50 – 75
Total Dry Film Thickness (DFT) microns		**250 –300**

SYSTEM NO. 2	APPLICATION	DFT (MICRONS)
Area	**Steel Decking / Non-slip steel surfaces**	
Surface Preparation	Solvent de-grease, near white metal blast (SSPC-SP10) with 25 – 50 microns surface profile	
Primer Coat	Epoxy Zinc rich Primer	50-75
Intermediate coat	Epoxy High Build/mastic with entrained aggregate.	300-350
Final	Polyurethane-Finish	50-75
Total Dry Film Thickness (DFT) microns		**400-500**

SYSTEM NO. 3	APPLICATION	DFT (MICRONS)
Area	**Steel Flare Structure and low maintenance areas.**	
Surface Preparation	Solvent de-grease, near white metal blast (SSPC-SP10) with 25 – 50 microns surface profile	
Coating	Thermal Spraying of Aluminium Silicon resin finish (for use up to 450°C)	200-250 30 - 50
Total Dry Film Thickness (DFT) microns		**230 - 300**

SYSTEM NO. 4	APPLICATION	DFT (MICRONS)
Area	Uninsulated exterior surfaces of Carbon steel **vessels**, exchangers, Storage tanks, piping, pumps and other equipment or process skid units (including support structures) with surface ***temperatures not exceeding 120℃.***	
Surface Preparation	Solvent de-grease, near white metal blast (SSPC-SP-10) with 25 – 50 microns surface profile	
Primer Coat	Inorganic zinc rich epoxy	50 – 75
Intermediate Coat	1 coat polyamide cured high build epoxy Note (1)	150 – 200
Finish Coat	1 coat Aliphatic Polyurethane	50 – 75
Total Dry Film Thickness (DFT) microns		**250 – 300**

SYSTEM NO. 5	APPLICATION	DFT (MICRONS)
Area	Uninsulated exterior surfaces of Carbon steel vessels, piping, pumps and other equipment or process skid units (including support structure), with surface ***temperatures above 120℃ and not exceeding 250ºC***	
Surface Preparation	Solvent de-grease, near white metal blast (SSPC-SP-10) with 25 – 50 microns surface profile	
Primer Coat	Inorganic zinc silicate (self cure)	40-50
Intermediate Coat/ **Finish Coat**	High Temperature Silicone Acrylic	50
Total Dry Film Thickness (DFT) microns		**100**

SYSTEM NO. 6	APPLICATION	DFT (MICRONS)
Area	Uninsulated exterior Carbon Steel surfaces with Temperature exceeding 250ºC like **Flare stacks, Chimneys, Exhausts, vents, and pipework up to 450ºC.**	
Surface Preparation	Solvent de-grease, near white metal blast (SSPC-SP-10) with 25 – 50 microns surface profile	
Primer Coat	Inorganic zinc silicate (self cure)	40-50
Finish Coat	High Temperature Silicone Aluminium	2 x 25
Total Dry Film Thickness (DFT) microns		**100**

Note: For surface temperature above 450ºC two coat of 100µm Poly-siloxane system can be used.

SYSTEM NO. 7	APPLICATION	DFT (MICRONS)
Area	Uninsulated exterior austenitic **stainless steel surfaces** operating up to 120°C and closed spaces subject to condensation.	
Surface Preparation	Solvent degrease, sweep blast to achieve an anchor profile of approximately 45 microns	
Primer Coat	1 coat epoxy Primer	50 – 75
Intermediate Coat	1 coat epoxy Polyamide	150 – 200
Finish Coat	1 coat Aliphatic Polyurethane	50 – 75
Total Dry Film Thickness (DFT) microns		**250 – 300**

SYSTEM NO. 7A	APPLICATION	DFT (MICRONS)
Area	Uninsulated exterior austenitic stainless steel surfaces operating between 121°C & 200°C and closed spaces subject to condensation.	
Surface Preparation	Solvent degrease, sweep blast to achieve an anchor profile of approximately 25-45 microns	
Primer Coat	1 coat High temperature Silicone Acrylic	30
Finish Coat	1 coat High temperature Silicone Acrylic	30
Total Dry Film Thickness (DFT) microns		**60**

NOTES:

1. ***Abrasive used shall be non-metallic and chloride free.***
2. ***All paints shall be free from both chloride and low melting point metals in any form.***

SYSTEM NO. 8	APPLICATION	DFT (MICRONS)
Area	**Galvanised Steel Surfaces**	
Surface Preparation	Cleaning with Alkaline detergent followed by fresh water wash.	
Primer Coat	1 coat etch primer of epoxy	10 – 15
Intermediate Coat	Polyamide Cure Epoxy	50 – 75
Finish Coat	Aliphatic Polyurethane	50 – 75
Total Dry Film Thickness (DFT) microns		**100 – 125**

SYSTEM NO. 9	APPLICATION	DFT (MICRONS)
Area	**Internal surface of Tank for Diesel storage.**	
Surface preparation	Solvent degrease, near white metal blast (SSPC-SP-10) with surface profile 50 – 75 microns	
Coating Materials	2 coats of high build epoxy phenolic	2 x 125 = 250
Total Dry Film Thickness (DFT) microns		**250**

SYSTEM NO. 10	APPLICATION	DFT (MICRONS)
Area	**Internal surface of vessel/Tank for Fire water , Service water and Potable water(*) storage**	
Surface preparation	Solvent degrease, near white metal blast (SSPC-SP-10) with surface profile 50 – 75 microns	
Coating Materials	2 coats of high build Polyamide cure epoxy	2 x 125 = 250
Total Dry Film Thickness (DFT) microns		**250**

Note: (*) For Potable water storage the paint shall be certified for potable water storage

SYSTEM NO. 11	APPLICATION	DFT (MICRONS)
Area	**Inside Bottom plates (underside) of all Onshore storage tanks**	
Surface preparation	Solvent degrease, near white metal blast (SSPC-SP-10) with surface profile 50 – 75	
Primer Coat	Not required	
Intermediate coat	Option 1 - Belzona 5811 (Note 1)	**250**
	Option 2 - Coal Tar Epoxy (Note 2)	**125 - 140**
Finish Coat	Option 1 – Belzona 5811 (Note 1)	**250**
	Option 2 - Coal Tar Epoxy (Note 2)	**125 - 140**
Total Dry Film Thickness (DFT) microns for Belzona 5811		**500**
Total Dry Film Thickness (DFT) microns for Coal Tar Epoxy		**250 - 280**

NOTES:

1. This product is the preferred HSE option and the Belzona requirements relating to the application and usage as defined in their Instructions for Use, Product Specification Sheet and Material Safety Data Sheets (for Solidifier and Base) shall be complied with.

2.) This product shall only be used by personnel who have been advised of the potential risk to their heath, who are fully equipped with appropriate PPE, and who are adequately supervised to ensure that the PPE is worn at all times that the product is in use"

SYSTEM NO. 12	**APPLICATION**	**DFT (MICRONS)**
Area	Internal surface of Process vessels like Liquid Separator, **Production Separator and Flare KO Drums.**	
Surface preparation	Solvent degrease, white metal blast (SSPC-SP-5) with 75-100 microns surface profile	
Coating Materials	Glass Flake Vinyl Ester Lining	2 x 500=1000
Total Dry Film Thickness (DFT) microns		**1000**

SYSTEM NO. 13	APPLICATION	DFT (MICRONS)
Area	Internal surface of Glycol and Methanol Tanks	
Surface preparation	Solvent degrease, white metal blast (SSPC-SP-5) with 75-100 microns surface profile	
Coating Materials	2 coats of two pack solvent free epoxy	2 x 300=600
Total Dry Film Thickness (DFT) microns		**600**

SYSTEM NO. 14	APPLICATION	DFT (MICRONS)
Area	**Fire proofing (Carbon steel)**	
Surface preparation	NACE No.1 / SSPC – SP 5 (H)	50 to 75 µm (2 to 3 mil)
Coating Materials	**Prime Coat :** Epoxy / phenolic **Finish Coat :** Epoxy / phenolic	 150 µm (6.0 mil) 150 µm (6.0 mil)
Total Dry Film Thickness (DFT) microns		**-**

SYSTEM NO. 15	APPLICATION	DFT (MICRONS)
Area	**Insulated** Carbon steel & Austenitic stainless steel exterior surfaces of Vessels, exchangers, Storage tanks, piping, pumps and other equipment or process skid units (*including support* structures) with surface temperatures up to 150°C.	
Surface Preparation	Solvent degrease, sweep blast to achieve an anchor profile of 25 – 45 microns	
Primer Coat	1 coat immersion grade epoxy phenolic	125
Finish Coat	1 coat immersion grade epoxy phenolic	125
Total Dry Film Thickness (DFT) microns		**250**

NOTES:

1. ***For stainless steel, abrasive used shall be non-metallic and chloride free.***
2. ***All paints shall be free from both chloride and low melting point metals in any form.***

Note:

COLOUR CODE

Colour Code of Piping shall be as per OMR-2017 and IS 2379**.**