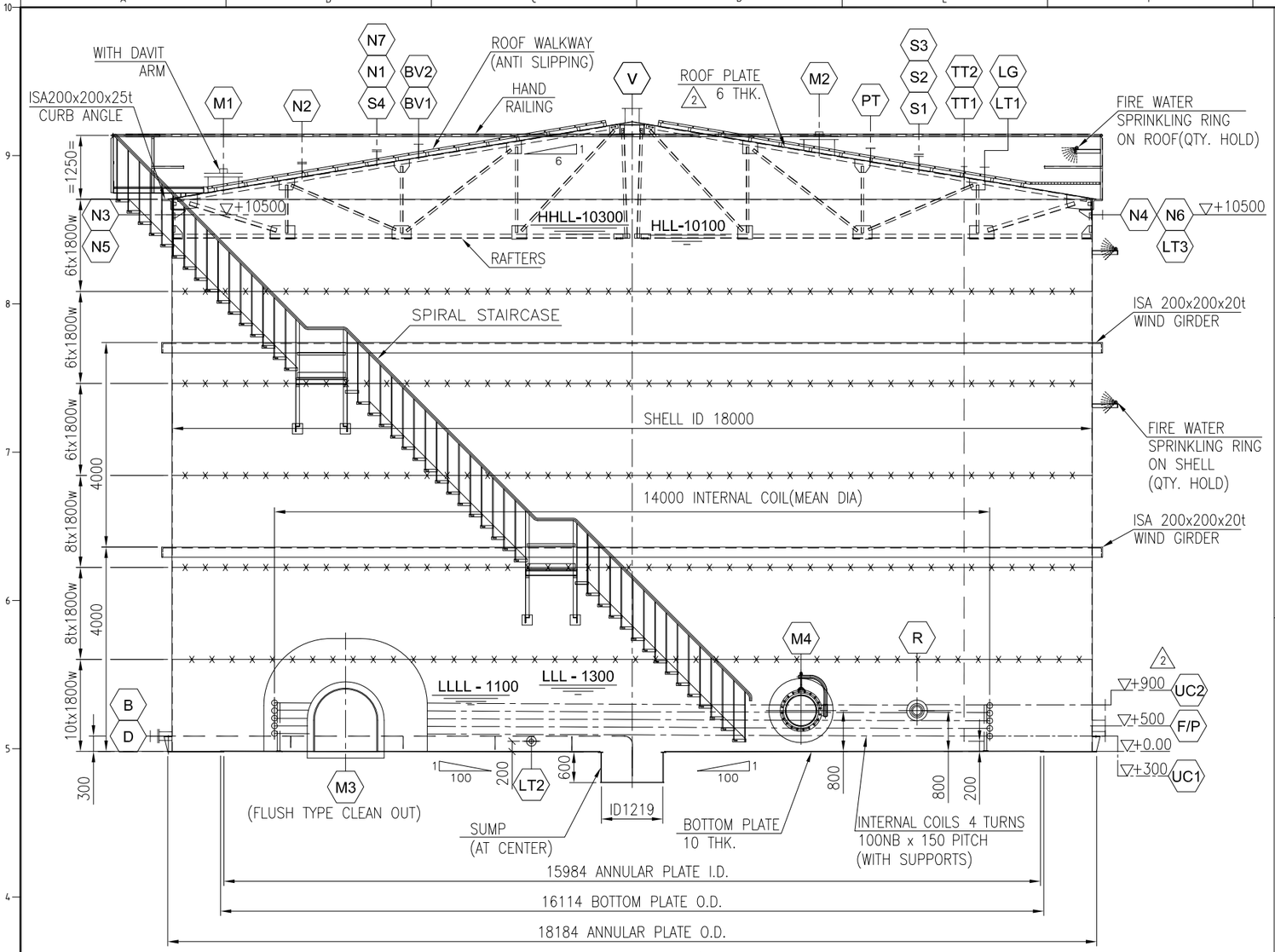

ELEVATION 2

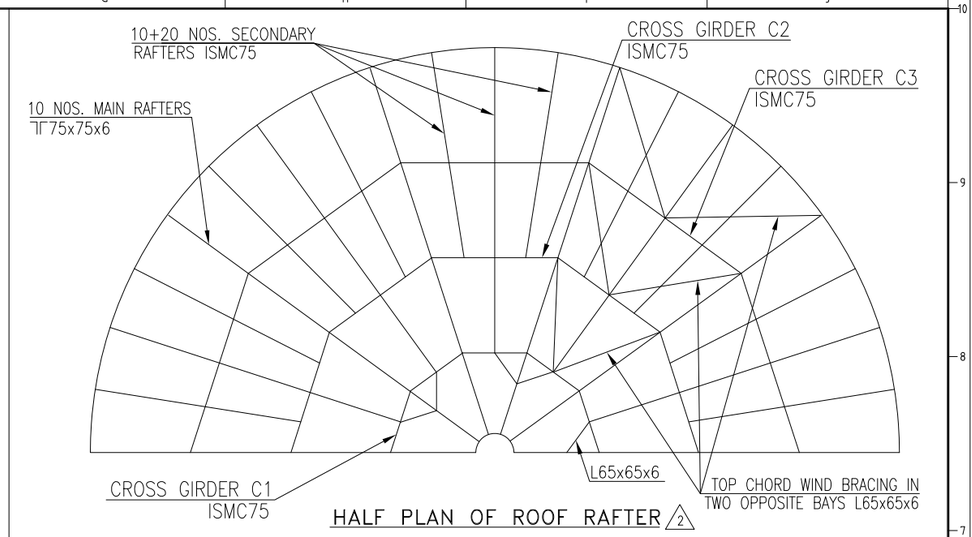

HALF PLAN OF ROOF RAFTER 2

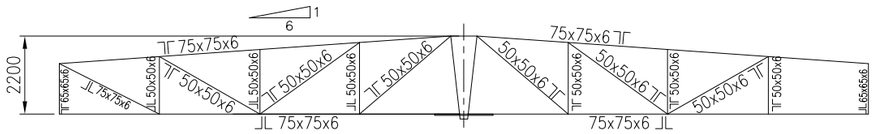

ARRANGEMENT OF ROOF RAFTER 2

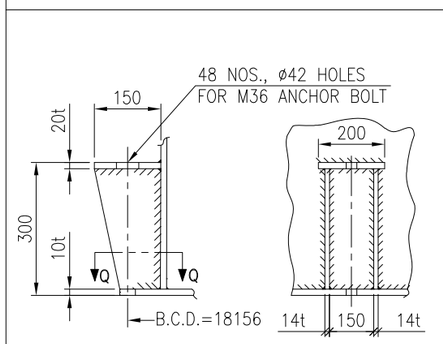

DETAIL OF ANCHOR CHAIR 2

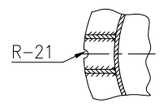

SECT. Q-Q

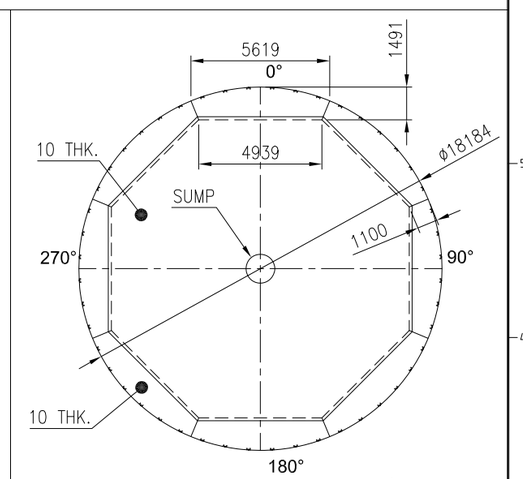

ANNULAR PLATE LAYOUT 2

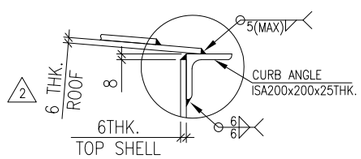

CONNECTION DETAIL OF CURB ANGLE

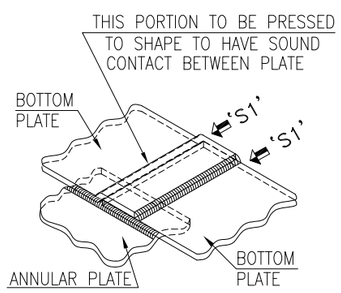

(TYP. WELD JOINT DETAIL ANNULAR PLATE TO BOTTOM PLATE) 2

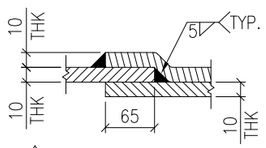

2 SECTION S1-S1

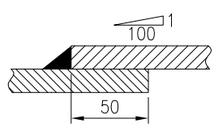

(TYP. WELD JOINT DETAIL BOTTOM PLATE)

NOTES:

01. ALL DIMENSIONS ARE IN mm UNLESS OTHERWISE SPECIFIED.
02. NOZZLE ORIENTATION & TOP PLATFORM DETAILS WILL BE ISSUED LATER.
03. SPIRAL LADDER, PLATFORM & HANDRAILS DETAILS SHELL BE AS PER QUANTA STANDARD MC-STD-413.
04. STRUCTURAL ARRANGEMENT OF CONE ROOF SHELL BE AS PER QUANTA STANDARD MC-STD-440 (SH. 10 OF 11).
05. MANHOLE M1 & M2, M3 & M4 LOCATION SHALL BE 180° APART.
06. 2 DELETED.
07. SUITABLE SUPPORTS TO BE PROVIDED FOR NOZZLE WITH DIP PIPE.
08. NOZZLE 'D' SHALL BE INSIDE PROJECTED TO DRAIN FROM SUMP.
09. BASE FOUNDATION DESIGN SHOULD BE WITH TOP SURFACE WITH TAR COATING AFTER PERFECT COMPACTION OF SAND FILED IN THE RING OF FOUNDATION.
10. TAR COAT SHALL BE WITH THE SLOP FROM OUTSIDE TO INSIDE AS SHOWN.
11. VACUUM BOX TEST SHALL TO CHECK THE BOTTOM PLATE WELDING FOR DETECTION OF LEAKAGE AND DP TEST IS CARRIED OUT.
12. FOAM INJECTION NOZZLES SHALL BE EQUALLY PLACED @ 90° APART

DESIGNED BY :

QUANTA

QUANTA PROCESS SOLUTIONS PVT. LTD.
Quanta House, Bhailal Amin Road, Gorwa, Vadodara 390003, GUJARAT, INDIA

CLIENT : SUN PETROCHEMICALS PVT. LTD.
KHAMBHAT

PROJECT : BHASKAR FIELD

TITLE : CRUDE OIL STORAGE TANK (MECHANICAL DATA SHEET)

SIZE	SCALE	PROJ. NO.	DOC. NO.	SHEET NO.	REV.
A3	N.T.S.	1019	1019-MC-MDS-T-101	4 OF 4	2